CEASEFIRE

WORLD SERIES

Watermist Suppression Systems

www.ceasefire.co.uk

Globally Certified Quality.
Now in the United Kingdom.

CEASEFIRE INDUSTRIES UK LTD

Ceasefire UK is a 100%-owned subsidiary of Ceasefire Industries, the most trusted fire safety brand in India and a fast emerging global conglomerate. With its globally certified, holistically-integrated range of fire fighting solutions, the company is amongst the rarest in the world to have such a diverse product portfolio as part of one eco-system.

The company is a leading manufacturer of a 360 degree-unified product range that includes - A Complete line of Fire Extinguishers with the widest variety of extinguishing agents, Special Application Extinguishers, Highly-advanced In-Panel Suppression Systems, Total Flooding Systems, Greenest technologies including Inert Gas Based Suppression, Revolutionary Watermist Based Suppression Systems, Extensive range of Watermist and Wet chemical Based Kitchen Fire Suppression Systems, Hydrant Systems, Fire Alarm Systems and other highly-specialised fire fighting technologies.

This extensive product portfolio is built at the very forefront of technology and conforms to the highest global standards and carry a host of international certifications by world's top-notch quality agencies including - EN3, EN1866, LPCB, BSI, MED, PED, VDS, ISO9001. Manufactured at the company's state-of-the-art production facility in India, Ceasefire's fire fighting solutions are setting global benchmarks in quality..

Best names across industry segments in India and other parts of the world have counted on us for their safety, including global giants, MNCs, Government Agencies, Railways, Airports and Military & Strategic Establishments.

Totalling 500,000 customers. We've never let anyone down, ever.

A range certified for quality by the top-notch agencies in the world.

WIDEST RANGE OF WATERMIST BASED SUPPRESSION SYSTEMS

Ceasefire offers a full-spectrum range of Watermist based suppression systems to suit the needs of every kind of premises and application. These include Highly advanced Indoor Auto-Quell Systems, Specialized Systems for Generator, Transformers and Kitchen protection.

CEASEFIRE DESIGN CELL – THE REAL CEASEFIRE ADVANTAGE

The real advantage of Ceasefire's Fire Suppression Systems comes in form of company's In-house Design Capability. The Design cell comprises of a team of qualified Engineers, CAD Designers and Fire Experts who have extensive experience of customizing fire suppression systems for a wide variety of spaces including Offices, Factories, Data Centers, Schools, Hospitals, Warehouses, Residential Towers, Airports, Malls and more. Each system is customized as per the requirements of the premises.

A THROUGH SURVEY OF THE PREMISES

The Ceasefire Design Cell Experts, carefully study the premises where the suppression system is to be installed, keeping in mind the premises at large, the fire hazards associated with the premises, challenges around collateral damage and the assets that need to be protected at large.

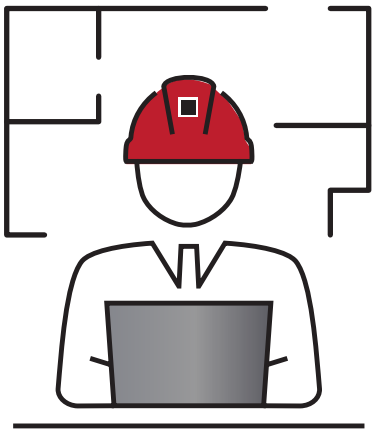

ADHERENCE TO PROTOCOLS

The design of every system follows predefined guidelines and principles laid out by the quality certification agencies and nothing is ever done outside of the prescribed standards.

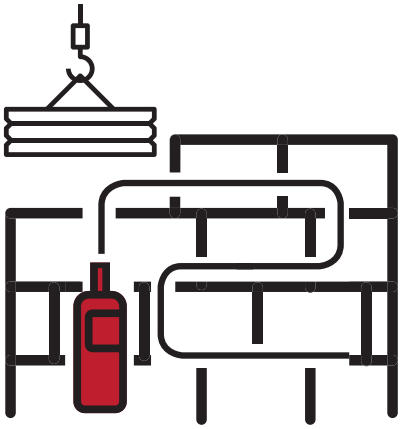

CUSTOMIZED SOLUTIONS

The outcome is a system that adheres to all the guidelines in the most precise manner and safeguards the area in a in the best possible way.

A DIVERSE RANGE OF SUPPRESSION SYSTEMS

The Watermist Range of Fire Suppression Systems: An integral part of Ceasefire's Fire Suppression Systems range is the Watermist Range of Fire Suppression Systems. These state-of-the-art systems are the greenest systems available in the world. Based on the revolutionary Watermist technology these systems have been designed for specialized applications such as Offices, Factories & Warehouses. A customized configuration of this system is available each for Transformer Area protection and Generators. These Watermist based systems are configurable as either Pump Based Systems, Rotor Based Systems or Stored Pressure Air based systems, depending upon the application of the system in a premises.

OUR TRUE DIFFERENTIATOR: OUR SERVICE STRENGTH

Installation & Service Strength:

The advantages with Ceasefire Systems don't just end with the Design capability of the company and its extensive range of fire suppression solutions.

A key strength of Ceasefire is to be able to install the system at a premises right with its team of trained technicians who follow the guidelines stated in the approving standard to the last letter.

The team is dedicated for installations & service of the systems and follows a documented procedure to do so and undergoes regular audits from the certification agencies. In order to keep this team updated on the design, installation & service norms, regular training programs & workshops are carried out. Being a customer facing interface this team is given great strategic importance in the Ceasefire ecosystem.

THE MOST HOLISTICALLY INTEGRATED FIRE FIGHTING RANGE.

The Ceasefire ecosystem has evolved to encompass a very dynamic and diverse range of fire safety products that truly complement each other. The result is a 360 degree, holistically-integrated range that can address any kind of fire safety requirement for any kind of premises with utmost perfection.

Wide range of Portable & Trolley Mounted Fire Extinguishers

ABC Powder, Water & CO_2-based extinguishers. Certified to EN3 / EN1866 standards.

Portable & Trolley Mounted Watermist-based Extinguishers

Exclusive range of Watermist-based portable and trolley mounted fire extinguishers, ready to fight large fires without any collateral damage.

Special Application Fire Extinguishers

Feature-full Clean Agent, Wet Chemical and Special Agent for Class B and Metal Fire-based fire extinguishers.

Designer Series Home & Car Fire Extinguishers

ABC Powder & Clean Agent-based fire extinguishers that come in aesthetically pleasing designs and colours.

In-Panel Tube-based Fire Suppression System

Certified by LPCB for LPS1666 Standard Certification for 2 and 4 kg HFC227ea and HFC236Fa gas variants.

Kitchen Hood Fire Suppression Systems

Watermist and Wet Chemical-based Systems. Certified by LPCB for LPS1223 Standard Certification. The range also includes BSI tested systems for domestic kitchen application.

Watermist-based Suppression Systems

Watermist-based Systems with LPCB certified nozzles for exclusive application in Offices, Warehouses, Factories, Generator and Transformer areas.

Specialised Gas-based Suppression Systems

HFC227ea-based System, available in both Engineered and Pre-engineered variants. Certified by LPCB for LPS1230 Standard Certification.

Inert Gas & CO_2 Based Suppression Systems

Ceasefire's VDS approved Inert Gas and CO_2 based systems are the greenest and most powerful extinguishing systyems available today in the world.

Retrofittable Suppression Systems

Ceasefire Atom X, retrofittable suppression system that requires minimal pipes and fittings and consumes least amount of your productive work space.

Hydrant Systems

Completely Independent Watermist-based Hydrant Systems.

Fire Alarm Systems

Ceasefire's CF XPlus range of Fire Alarm systems come in a complete spectrum of Conventional, Addressable, Wireless and Standalone systems.

Special Firefighting Systems

Advanced firefighting systems that are the first of their kind in the world.

Technological leader. Demand generator.

Through our extensive fire safety product portfolio, unmatched quality and knowhow, and by bringing high end products to existing, new and lower market denominators, we've been known to open market opportunities exponentially for Ceasefire's Business Associates.

PARTNER WITH CEASEFIRE.

Ceasefire hand-holds its business associates to grow along with the organization. There are a number of facilities & services designed to give our partners a platform to gather knowledge and use the Ceasefire market experience to their advantage.

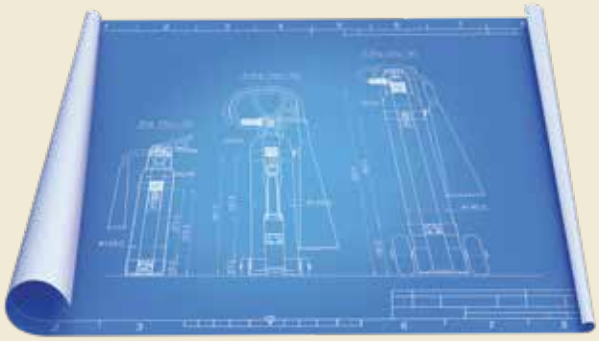

Extensive Technical Support: A key support to the Ceasefire Business Associates is the carefully crafted Technical Support module from the company.

This module allows a Ceasefire Business Associate to request support through:

Email

Call

Live Call Support

Accompanied Calls

Ceasefire embeds extensive training and development into it's system to build a unique competitive edge.

Ceasefire Academy of Forging Excellence (CAFE):

Most advanced training platform with a blended learning approach deploying effectively online training, instructor-lead sessions, tests and periodic evaluation.

Live Webinars:

These Webinars are an effective tool at the disposal of the Business partner to market the Ceasefire technologies to their customers, in addition to using these as a self-learning and doubt clearing sessions.

Ceasefire E Proposal Utility: Our Business associates get access to their exclusive login page on the Ceasefire Customer Relations Portal (CCRM), which acts as the single dashboard window to access every resource available for them in the company.
The module allow the users to create most appealing and customized proposal documents at the click of a button. The portal is a repository of standard proposal templates as well as elaborate Digital Library that hosts a variety of documents like Data Sheets, Certificates, Videos, Product Brochures and lot more.

The Ceasefire partner support does not end at providing technical and product support. We go an extra mile to give marketing and logstic support to our partners to ensure its a winning game for them.

Marketing Collaterals + Emailer Module:

The CCRM login page gives business associates access to a whole host of marketing collaterals like brochures, print ads, social media/digital ads, BTL collaterals and more.

Apart from the support on marketing collaterals, the system also enables the business partner to automate email marketing, SMS and Whatsapp marketing for themselves.

Order Tracking & Logistics:

The CCRM Login also provides a very smart dashboard view to Ceasefire Business Associates to be able to track all-important events, activities & their progress.This includes the status of their orders, payments, dispatch, transit, billing and much more.

CEASE FIRE

WORLD SERIES

WATERMIST SUPPRESSION SYSTEM

Today, the fire safety industry across the world is witnessing revolutionary advancements in technology. However, an enormous number of buildings still deploy old-fashioned water-based suppression systems. Even though water, as we know, is the oldest and most natural of all extinguishing agents with a massive cooling power, it still has its own sets of limitations.

ARE YOU HARNESSING THE ENORMOUS POTENTIAL OF WATER?

Despite its firefighting prowess, water has its limitations when used in its natural form.
The first and foremost limitation of a water-based suppression system is that it is not designed to protect the property. It's built to kill the fire with total flooding and stop it from spreading to the neighbouring building. Total flooding in turn causes huge collateral damages and total loss of assets. To recover from this loss and to get the business functional again takes a much longer time and affects the business in a harsh way.

The flooding in process also leads to a large amount of wastage as only a small percentage of the water discharged actually comes in contact with the fire. In addition to this, to have such quantity of water available at the time of fire accident requires large water resources or storage tanks. To make matters worse, water in its natural form is not compatible with all types of fire. Like using water on oil fire or an electrically started blaze can be catastrophic.
The need of the hour today is cutting-edge technology that causes the least collateral damage whilst maintaining the green benefits of water as an extinguishing agent.

Ceasefire brings to you its pioneer Watermist-based Suppression System that is fully equipped to detect and suppress fires automatically, without any collateral damage.

WATERMIST – THE PARADIGM TECHNOLOGY

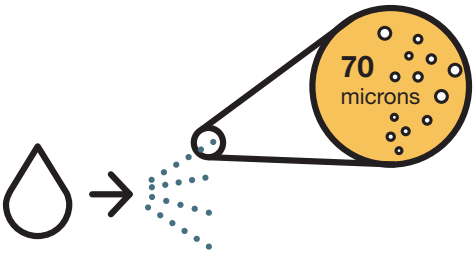

This pioneering technology breaks water down into a fine mist of less than 70 microns.

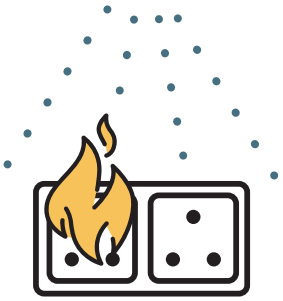

This mist is then thrown at the fire with an optimal kinetic force, covering a large surface area.

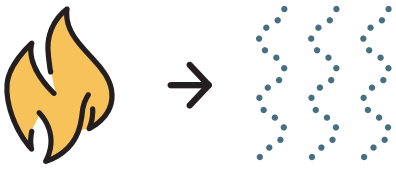

As soon as the mist comes in contact with the fire, it instantly turns into steam, increasing its volume 1600 times over.

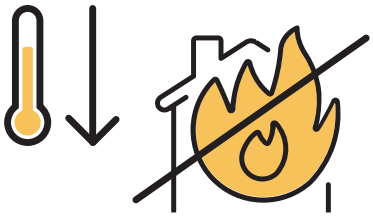

The steam envelopes the flames, cutting off the oxygen supply and reducing the temperature to below combustion level. This ensures that even the largest fire succumbs to Watermist technology in seconds.

EVAPORATION SURFACE AREA & SHIELDING SURFACE AREA

Various parameters like the force with which water is discharged, the droplet size of water and the nozzle coverage area make the Watermist system ultra effective on fires. Conventional water-based suppression systems work on the principle of cooling the combustible surface with large droplets of water and hence totally drenching assets.

However, research has shown that the droplet size plays a vital role in killing the fire while protecting assets from collateral damage. When these fine droplets of water enter a fire zone, there is a rapid exchange of heat which cools the fire and converts the droplets into steam. The smaller the size of the droplet, the larger is the surface area that it can cover for heat absorption and evaporation, thus resulting in lesser consumption of water to suppress the fire.

CEASEFIRE WATERMIST SUPPRESSION SYSTEM

Ceasefire's revolutionary Watermist-based Suppression System is fully equipped to detect and suppress fires automatically without leaving any collateral damage.

A network of detection devices, special Watermist nozzles, pumps, filters and water tank connectors are installed indoors. In the event of a fire, the system kicks into action in seconds. The specially designed nozzles dispense Watermist, made up of microscopic droplets of water (below 100 microns), onto the fire affected area, quickly putting out the flames as well as bringing the temperature down to non-combustion levels. Entirely self-activated and requiring no human intervention, this integrated system provides a complete detection and suppression solution, working quickly to save property and lives.

What's more, since it is Watermist-based, it has no long-term effect on the work environment and operations can resume with no time lost.

Besides being 100% green, Watermist causes no damage to equipment or the Earth. Making it absolutely safe to use on electronics, sensitive equipment and above all else it is safe for humans.

CUSTOMISATION FOR COMPLETE PROTECTION

We believe that no two premises are alike and there is a need for custom-made configuration for each requirement. Ceasefire's Watermist-based Suppression System comes to rescue with an array of key component variants that can be assembled in various configurations based on the customised requirement of the premises. This unique suppression system will comprise the detection sensors, mist generation technology and Watermist nozzles best suited for that premise.

WATERMIST GENERATION TECHNOLOGY

Watermist can only be generated when water is passed through the nozzles at a very high pressure. Ceasefire uses three technologies by which water can be converted to be a more potent fire extinguishing agent:

PUMP-BASED SYSTEM

A large area where higher quantities of Watermist may be required to curb a fire needs a bigger source of water. In such cases, the water is stored in a local tank/reservoir which is connected to a pump and in the event of a fire, the high-powered pump propels water from the reservoir/tank efficiently to the pipes and specially designed nozzles.

ROTOR-BASED SYSTEM

In cases where suppression systems protect smaller areas, a self-contained pulse mist-based system is used. Water is stored in nitrogen pressurised cylinders connected with detectors, pipes and nozzles. In an event of fire, the pressurised water is pushed through the specialised rotor and a little propellant (nitrogen) is also released into the water pipe via an air tube to create a bubbled mixture of water and nitrogen which arrives at the nozzle.

LARGE QUANTITY OF STORED COMPRESSED AIR

In this system, compressed air is stored separately to be mixed with water only at the time of activation. When the system gets activated, water and compressed air mix together from two different sources to spray Watermist through the nozzle.

PUMP-BASED SYSTEM

A fire in a commercial or industrial enterprise can be catastrophic. While preventive measures are a necessity, ensuring you have the right arsenal to fight fire is what's essential.

The Ceasefire Pump-based System is a revolutionary, all-purpose detection and fire suppression system. A network of detection devices, special Watermist nozzles and a connection to a water tank is installed indoors. In the event of a fire, the system kicks into action in seconds. The specially designed nozzles dispense Watermist, made up of microscopic droplets of water (below 120 microns), onto the fire affected area, quickly putting out the flames as well as bringing the temperature down to non-combustion levels. Entirely self-activated and requiring no human intervention, this integrated system provides a complete detection and suppression solution, working quickly to save property and lives. What's more, since it's a Watermist-based System, it has no long-term effect on the work environment and operations can resume with no time lost.

The Pump Driven System adds cutting edge technology to traditional sprinkler systems by harnessing Watermist for maximum extinguishing efficiency. Not only is it an economical replacement for traditional sprinkler systems in offices and buildings, it's also suitable for large-scale applications, or areas where the fire hazard is likely to be in an enclosed space (such as a large-scale food production unit, hangar, manufacturing unit). Water, the main component of this extinguishing system is stored in a reservoir/tank that is connected to a pump. On receiving a signal from the control panel, a high-powered pump propels water from the water reservoir/tank quickly and efficiently to the pipes and nozzles. This system generates high volumes of Watermist, ensuring higher firefighting effectiveness without using much water.

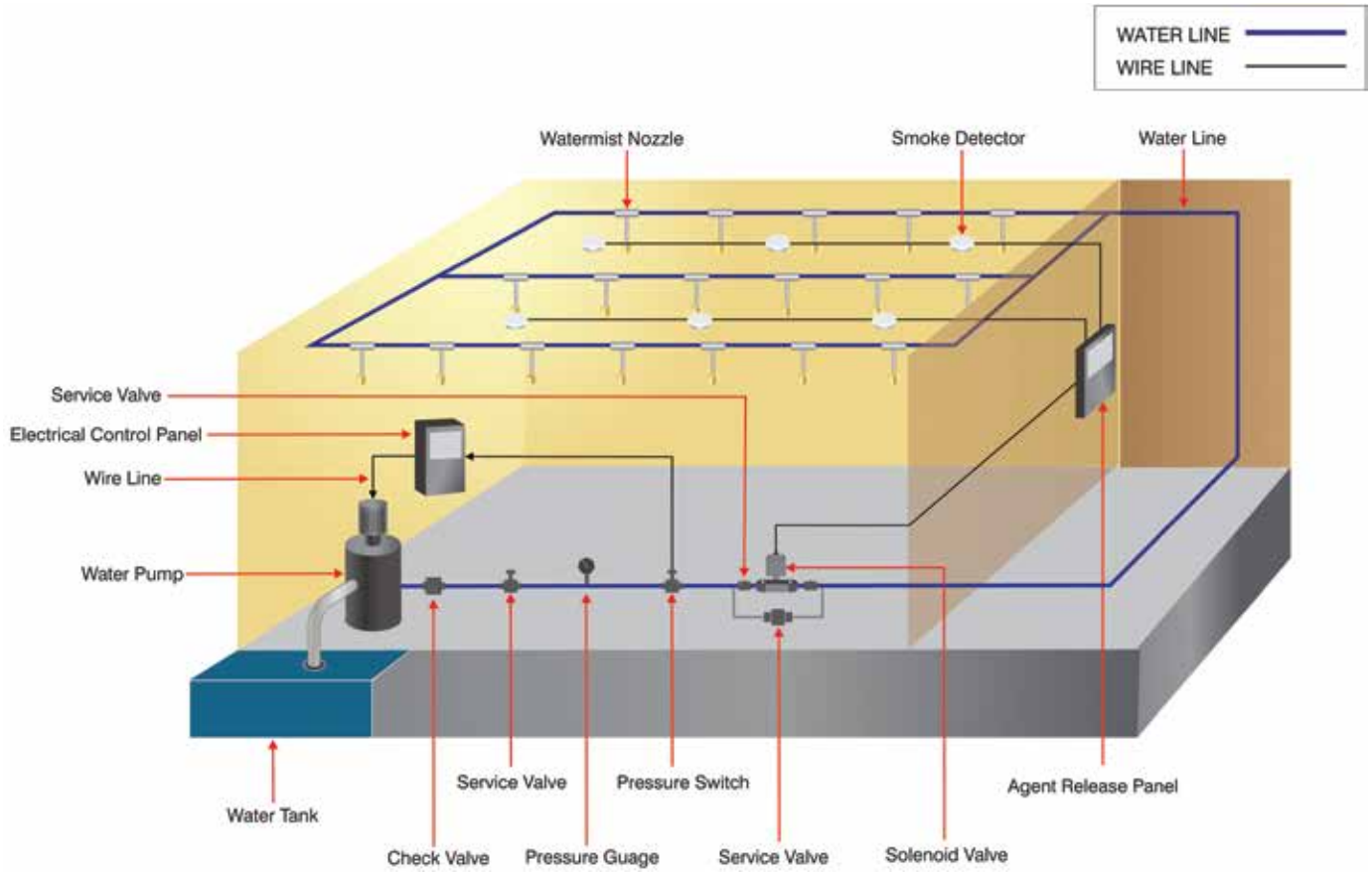

ROTOR-BASED SYSTEM

A fire in an indoor-based commercial or industrial enterprise can be catastrophic. Not only can it potentially destroy expensive equipment, gut the building and halt your operations indefinitely, it can also result in the loss of precious human life. While preventive measures are a necessity in any establishment, ensuring you have the right arsenal to fight fire is what's essential.

In large hotel chains with hectic, time bound meal services keeping the staff rushing around, these accidents are just waiting to happen. Such an accident can shut down your operations for several days, causing a substantial loss of business revenue. Not to mention the irreversible damage to the reputation of the brand you've carefully built over the years... gone in minutes. The Rotor-based System has been specially designed for micro-environments, or for areas where the fire hazard is likely to be in an enclosed space (such as in a food production unit, a machinery room, commercial kitchen, office or storage space). The extinguishing agent for the application is stored in cylinders attached to the network of pipes and detectors. This system also comprises of pressurised cylinders filled with water, available in sizes, rigged to the system via a manifold. A Multi-Rotor System propels water into the tubes. And a Single Hood Schrader Valve and a Multi Hood Pneumatic Spring Ball Valve release the water from the cylinder as soon as a drop in pressure is detected. This water is converted to Watermist in the nozzle, before being thrown at the flames, putting them out in seconds.

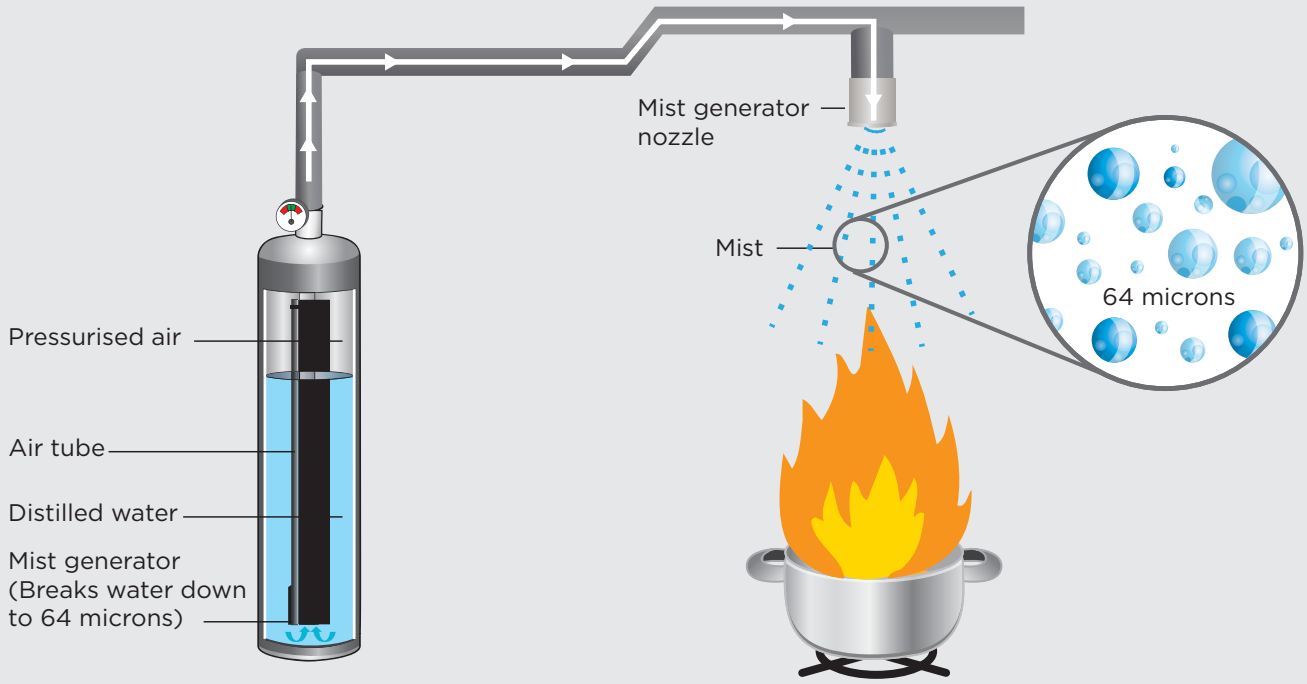

STORED COMPRESSED AIR SYSTEM

Business hubs such as offices, call centres and remote data sites are packed with expensive, critical equipment and intricate wiring. Enough to not only spark a fire, but fuel it till it becomes a raging inferno. Unfortunately, safeguarding these premises against fires is a challenge. Spread over such a large area, it is difficult to place firefighting equipment everywhere.

The Ceasefire Compressed Air is a Watermist-based, low-pressure, two-phase flooding system, that achieves extensive coverage with a combination of compressed air or nitrogen and a minimal amount of water.
The system uses advanced technology to achieve maximum extinguishing efficiency.
When the system's heat and smoke detectors sense a rise in temperature above normal levels, a signal is immediately sent out to the Control Panel and the system automatically gets activated. Once activated, the compressed gas from the cylinders enters the reducer via flexible high pressure tubes. At the same time, water from a pipe connected to a cylinder rushes through to the reducer. An integrated nozzle accelerates the gas to a supersonic velocity to achieve extensive throw, and shock-rarefaction waves disperse the water into miniscule droplets of 25 microns to produce a homogenous stream of mist. When thrown at the flames, this mist battles the fire and brings the temperature down to below combustion levels, preventing the fire from reigniting.

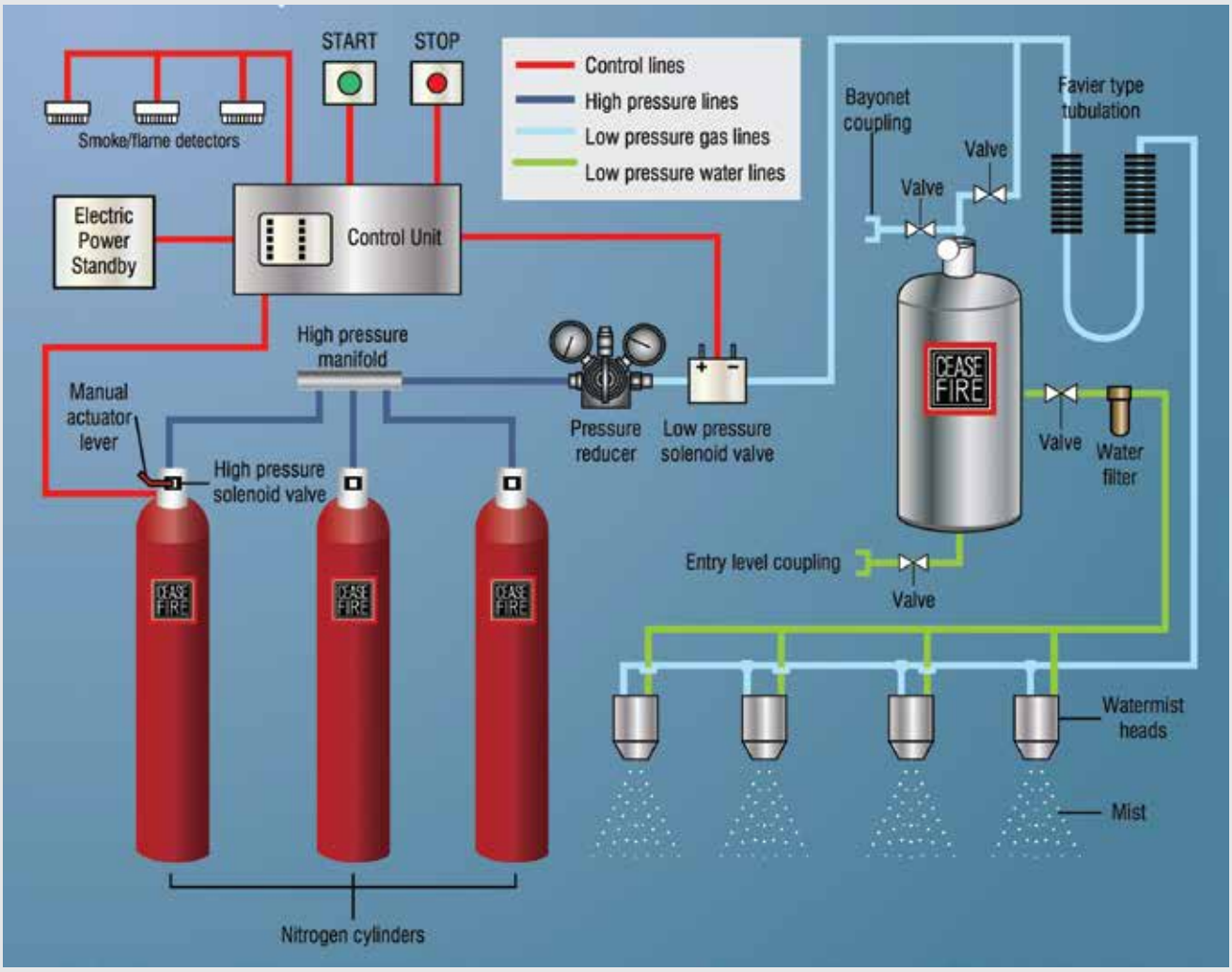

DETECTION SENSORS

The detectors guarantee a first line of safety. Ceasefire's detection range is the result of extensive hardware and software product design and development. Our stringent standards extend to all our products, including detectors. These detection devices communicate with the control panel, sending a signal that activates the system the very second a fire is detected.

The extensive range of detectors provides flexibility of solutions and application-specific support :

Conventional Heat Detector:
There are two variants in heat detectors –

Fixed Temperature Detector: Heat detection is achieved by the sensor continually measuring the ambient temperature of an area using Thermistor and acknowledging when the temperature exceeds the fixed point.

Rate of Rise Detector: Here heat detection is achieved by the sensor measuring not only the temperature rise but also the speed at which it's rising.

Conventional Smoke Detector:
This detection technology works either by the photoelectric method or the ionization method. In both, the sensor continuously analyses the air for the presence of smoke particles.

Aspiration Detection System:
It consists of a central detection unit which draws air through a network of pipes to detect smoke. It may also require a fan unit to draw in a sample of air from the protected area through its network of pipes.

Flame Detector:
This is an optical equipment for the detection of flames.

Linear Heat Sensing Cable:
A line-type form of fixed temperature heat detection cable that detects fire right where it occurs.

NOZZLES

The minimal water usage, combined with the fact that Ceasefire nozzles generate super fine Watermist droplets, means the mist quickly vapourises in the fire zone and surrounding atmosphere and causes no harm to delicate equipment. By adjusting the nozzle variant, water volume and air pressure parameters, we can control the qualities of the mists it generates. Droplets can range in size from 10 microns to 150 microns while mist streams may be limited to several centimetres or extended up to 12 metres. This unique flexibility allows Ceasefire to create optimal mist solutions for a broad range of applications.

All the products at Ceasefire are extensively tested in the world's largest, purpose-built, state-of-art fire test laboratories to guarantee that even the largest scale designs are fully proven in real fire conditions.

Our all-new range of Watermist Nozzles is broadly classified into:

SINGLE FLUID-BASED SYSTEM

Here water and air have a single inlet and outlet. Under this application we have two types of nozzles –

Open Nozzles are those that are pressurised with water till the deluge or solenoid valve, and

Closed Nozzles are those that are pressurised with the water up till the nozzle.

TWIN FLUID TECHNOLOGY

Here there are two separate inlets and outlets for water and air to form Watermist. Only open nozzles can be utilised in this application.

Please find the detailed list of Ceasefire Nozzles variants and their functionality mentioned in the technical specifications section.

APPLICATION AREAS:

COMMERCIAL KITCHENS

RECOMMENDED: ROTOR-BASED SYSTEM

The widespread presence of oil, butter and fat in food production pose a major fire hazard. Not only do oil fires spread rapidly, they cannot be put out with ordinary water extinguishers. And the chemical agent extinguishers that are utilised in such cases are equally tough on food as they are on fire. The Ceasefire Watermist-based Suppression System for commercial kitchens provides the perfect protection for food production units. Being Watermist-based, it's harsh on fires yet safe on food and kitchen equipment.

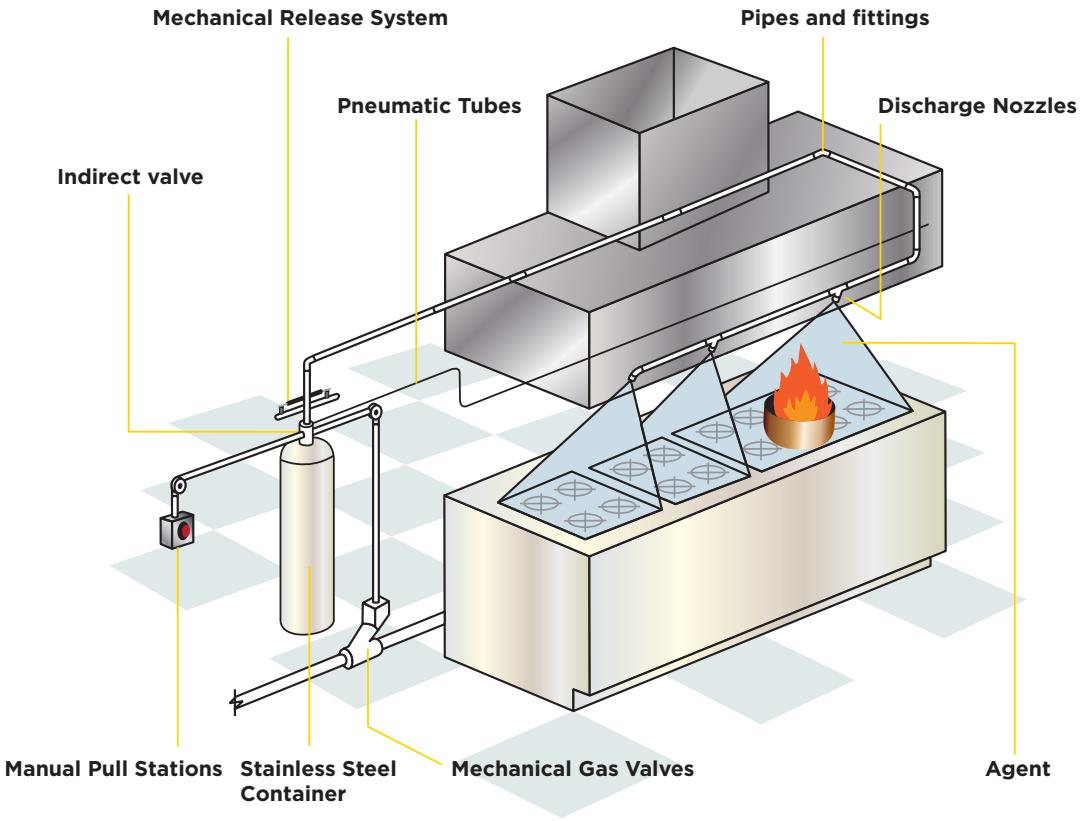

Working: Triggered by smoke, the first sign of fire, and a corresponding rise in temperature, this powerful automated firefighting system is fully equipped to douse the flames, before they spiral out of control. The Watermist discharged from strategically located specialised nozzles, installed in the hood and in all exhaust ducts, covers all possible fire risk areas. Simultaneously, the system can also shut the valve connected to the gas fuel line and electrical supply line, preventing further heating of cooking oil. Steam blankets the cooking oil and smothers the flames.

The Watermist simply evaporates, leaving your kitchen dry and ready to get back to business.

APPLICATION AREAS:

MACHINERY ROOM

RECOMMENDED: PUMP-BASED SYSTEM

Industrial sheds where expensive machinery and goods are stored can be very vulnerable to fire. Sparks from machines or wiring, caused by power fluctuations or a faulty installation, can fall on inflammable material or on the goods being stored there, resulting in a full-scale conflagration. Not only can it potentially destroy expensive equipment, gut the building and halt your operations indefinitely, but can also result in the loss of precious human life. While preventive measures are a necessity in any establishment, ensuring you have the right arsenal to fight fire is what's essential.

While chemical-based extinguishers can put out the fire, it comes at the cost of the equipment and goods. In such cases, the chemical-free Ceasefire Watermist-based Suppression System, which harnesses non-damaging and non-corrosive Watermist, ensures the fire is put out without leaving any collateral damage. What's more, it can be used on fires involving electrically charged devices as well.

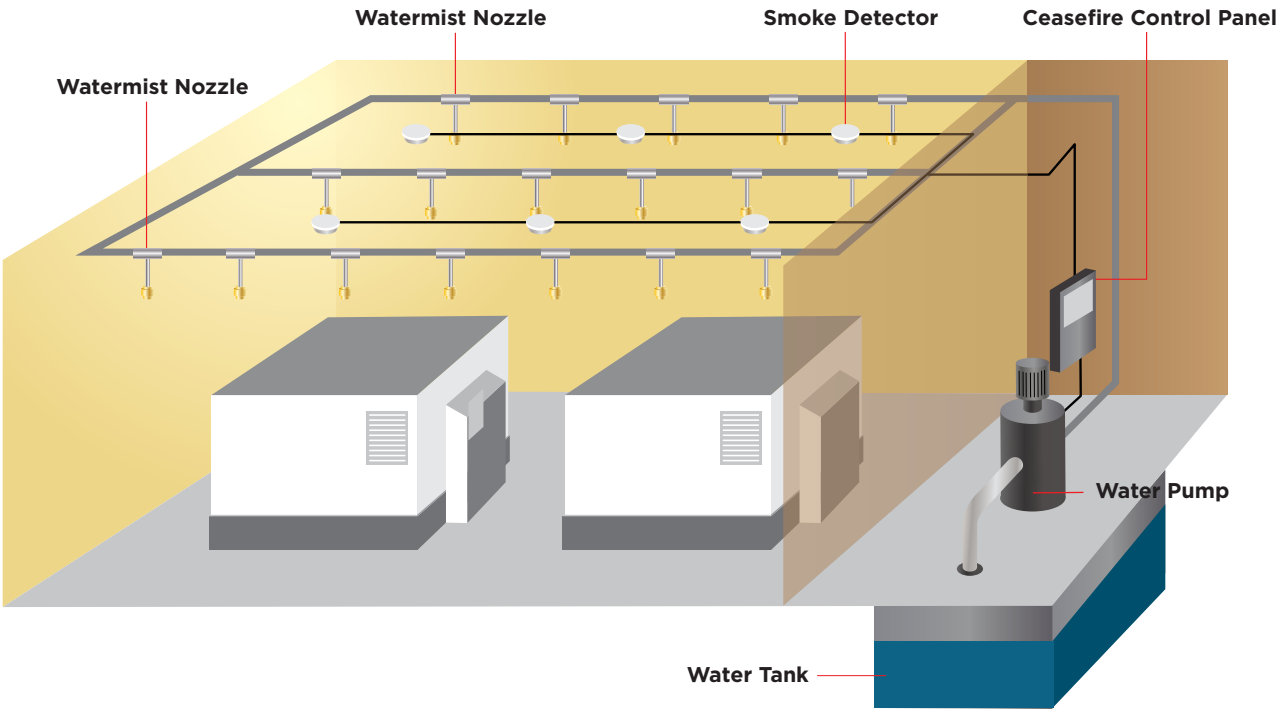

Working: A network of detection devices, special Watermist nozzles and a connection to a water tank is installed and in the event of a fire, the system kicks into action in seconds. The specially designed nozzles dispense Watermist, made up of microscopic droplets of water (below 100 microns), and onto the fire affected area, quickly putting out the flames.

Entirely self-activated and requiring no human intervention, this integrated system provides a complete detection and suppression solution, working quickly to save property and lives.

APPLICATION AREAS:

TRANSFORMERS

RECOMMENDED: PUMP-BASED SYSTEM

Transformers are electrical devices which convert alternating currents from one voltage to another, making them vital for any operation to run smoothly. The oil needed to fuel these transformers, coupled with high temperatures generated and the presence of huge amounts of electricity, makes the area vulnerable to fire. No matter what the size, oil-filled transformers pose a risk of explosion should the transformer fail and the insulating oil ignite. Even a small spark caused due to faulty wiring can lead to a deadly conflagration.

Besides, the high temperature and spread of oil can cause serious damage to the adjacent areas. Even if you were able to reach the transformer in time, you wouldn't necessarily be able to extinguish the fire.

The Ceasefire Watermist-based Suppression System is perfect for such environments as it detects and suppresses the fire right when it ignites. Watermist confines the fire in or around the transformer area and extinguishes it before it spreads, ensuring zero collateral damage.

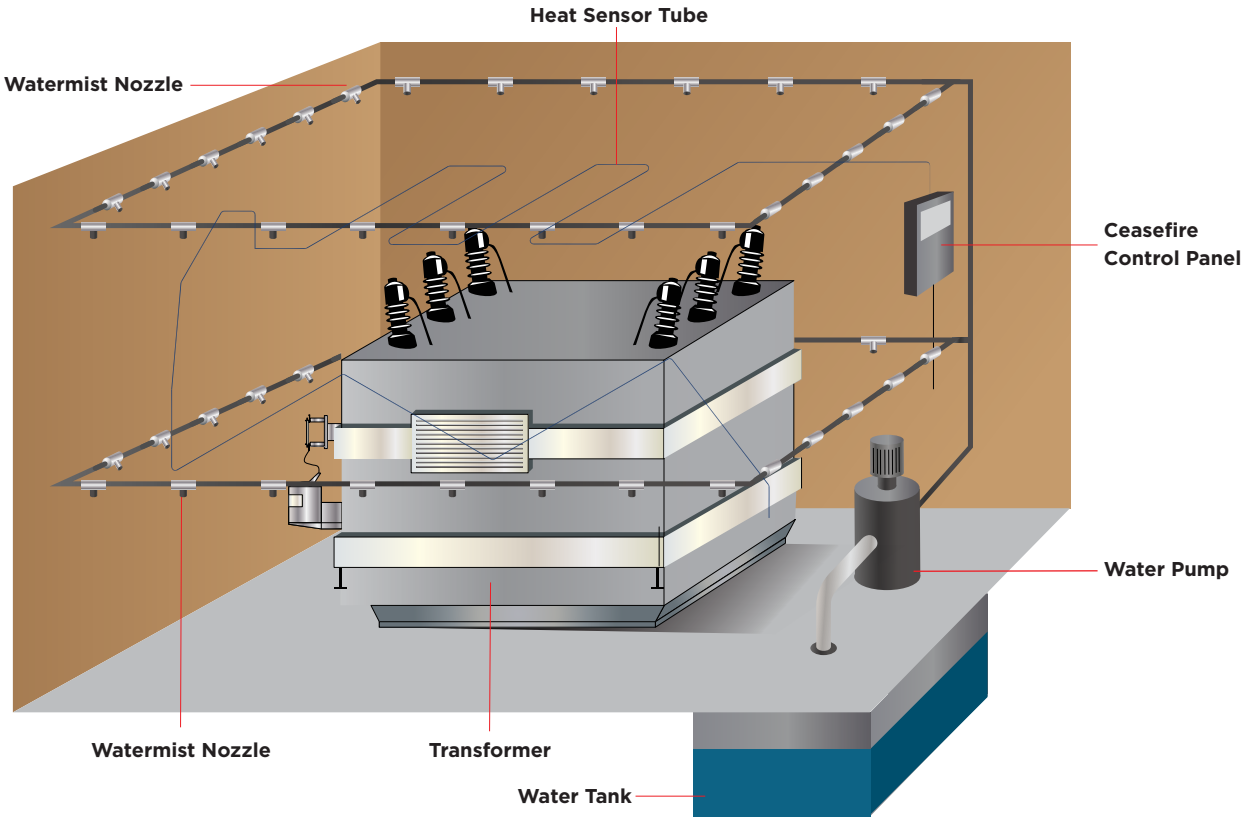

Working: The system consists of a network of detection devices, special Watermist nozzles and a connection to a water tank installed in the local environment of the transformer. In the event of a fire, the system is programmed to kick into action in seconds.

Entirely self-activated and requiring no human intervention, this integrated system provides a complete detection and suppression solution for transformer fires, working quickly to save property and lives.

APPLICATION AREAS:

GENERATORS

RECOMMENDED: ROTOR-BASED SYSTEM

Gasoline or oil-powered generators are common at manufacturing, commercial and industrial facilities as well as residential premises that rely on a steady source of power. Generators tend to produce a lot of heat, and as a result, the surrounding area gets extremely hot. The unavoidable presence of fuel is cause for concern as sparks can trigger a fire, which soon turns into a raging inferno. Often, generators are placed in remote areas or areas that are difficult to get to quickly. Which means, in an emergency, precious time is lost before help arrives. What's worse is that even if you detect the fire in time, you wouldn't necessarily be able to extinguish it.

The Ceasefire Watermist Suppression System is fully equipped to detect and suppress such fires automatically, without leaving any collateral damage. This means that the system not only tackles fires efficiently, it also helps reduce the time and money taken to clean up and re-establish damaged property. Its non-damaging, non-corrosive technology ensures zero downtime.

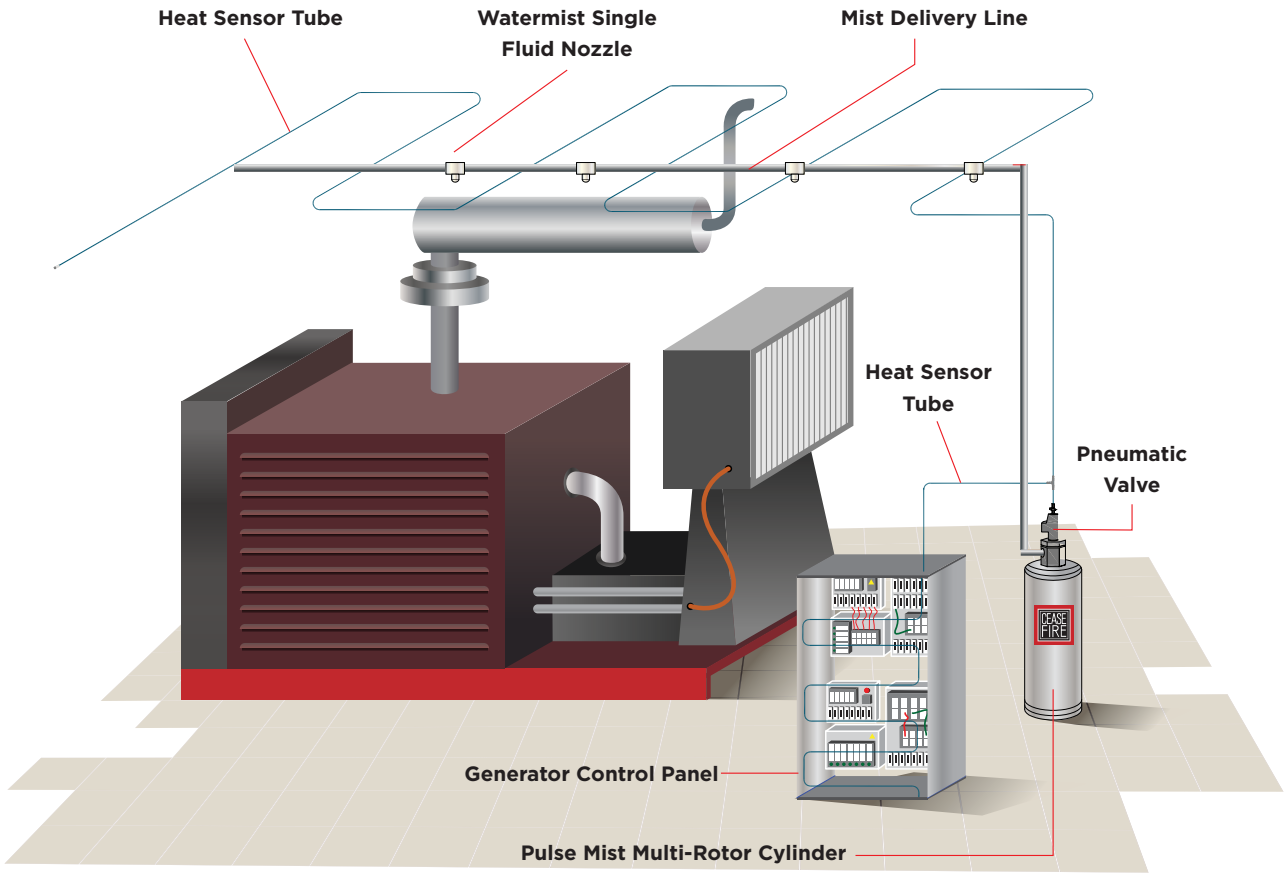

Working: First, in the generator area, a network of detection devices, special Watermist nozzles and a connection either to a water tank or water cylinders is installed in the microenvironment. In the event of a fire, the system kicks into action in seconds. The specially designed nozzles dispense Watermist, made up of microscopic droplets of water (below 70 microns), onto the fire affected area, quickly putting out the flames as well as bringing the temperature down to non-combustion levels.

APPLICATION AREAS:

HANGARS

RECOMMENDED: ROTOR-BASED SYSTEM

Fueled by the extensive presence of petroleum, grease, paint, etc, fires in aeroplane hangars can potentially end in a devastating explosion. What's more, any damage to the plane or its parts stored there can be economically crippling. Another cause for concern is that the sheer height and the presence of engines and metal could push the fire out of control. In the event of a fire in a hangar, the Ceasefire Watermist-based Suppression System's automatic fire detection and suppression capabilities work quickly and capably to put out the fire immediately. Being water-based, its non-damaging, non-corrosive technology ensures zero collateral damage as well as zero downtime.

APPLICATION AREAS:

WAREHOUSES

RECOMMENDED: STORED COMPRESSED AIR SYSTEM

Fires in deserted areas such as warehouses and storage areas can go undetected till all the goods stored inside are completely destroyed. What's more, depending on their contents, stored goods can actually provide fuel for the fire. Not only do fires in warehouses result in huge amounts in collateral damage, the fire can spread to adjacent storage areas. The Ceasefire Watermist-based Suppression system can prove invaluable for such applications. Fully equipped to detect and suppress fires automatically, it works independent of human intervention. As its water-based, Watermist's non-damaging, noncorrosive technology ensures zero collateral damage.

APPLICATION AREAS:

OFFICES & INDUSTRIES

RECOMMENDED: STORED COMPRESSED AIR SYSTEM

The presence of electronics, wiring, furniture, files, books and carpeting makes offices and industrial areas prone to fires. Not only do fires in such places result in huge amounts of collateral damage, they can also spell an end or long-term halt to business operations. Ceasefire Watermist-based Suppression Systems can prove invaluable in case a fire breaks out in an office or industrial building. They detect and suppress fires automatically using non-damaging, non-corrosive technology, ensuring zero collateral damage as well as zero downtime. What's more, it's kind on electronics and good for the environment as well.

APPLICATION AREAS:

TUNNELS & UNDERGROUNDS

RECOMMENDED: ROTOR-BASED SYSTEM

Tunnels and undergrounds are lit 24X7, with very little opportunity to check the wiring. What's more, with automobiles and fumes constantly in the environment even a small spark could trigger an inferno in seconds. The high ceiling doesn't help, making it harder to put out the flames. The Ceasefire Watermist-based Suppression System's automatic fire detection and suppression capabilities work quickly and capably to put out fires in these areas immediately and efficiently. Being water-based, its non-damaging, non-corrosive technology ensures zero collateral damage as well as zero downtime.

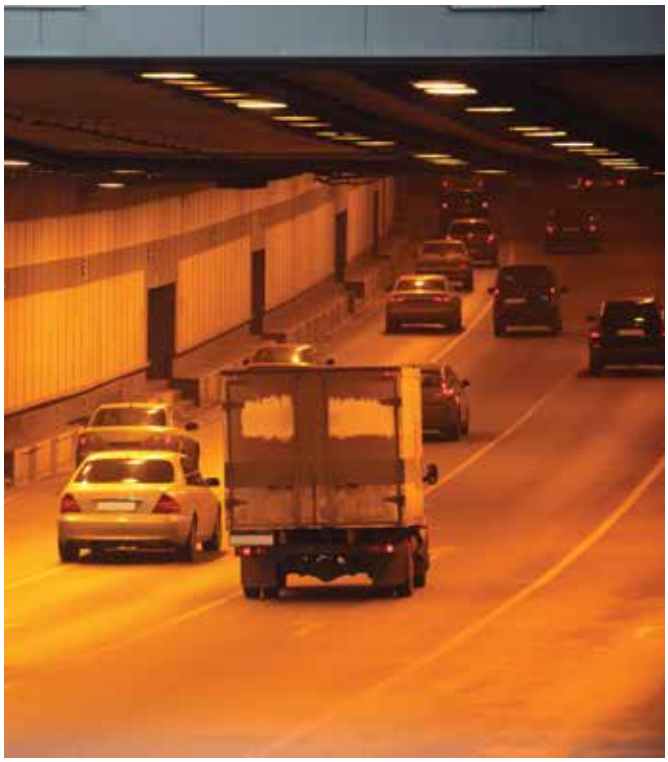

ADVANTAGES OF WATERMIST SUPPRESSION SYSTEM

	Multiple Applications: Works on A, B and electrically started fires, and is suitable for a variety of applications.
	Low Pressure: Water is stored in underground tanks at normal pressure and converted to high pressure Watermist when needed, and hence it's safer to maintain.
	Green Suppression System: Unlike other firefighting agents, Watermist neither damages the ozone layer nor does it contribute to global warming.
	Clean Extinguishing Agent: As the mist comprises water, it does not expose people to chemically active substances, ensuring it can be safely used with no risk of medical problems.
₹	**Economical:** Water as an agent does not cost anything. Traditionally the amount of water required is significantly low, which in turn means a smaller water reservoir and pumps with lesser construction and procurement costs.
	Lower Water Usage: Watermist uses only 20% of the water that conventional water-based systems use as it converts the water into a fine mist of 60-80 microns and increases the spread area.
	Self-actuating: Featuring an in-built detection mechanism that leads to instant and automatic activation, the system eliminates the need for human intervention.
	Quick Installation: A simple design ensures the system can be installed within a few hours, which means a major reduction in labour costs and downtime.
	Long-lasting: Its rugged quality ensures it can withstand even harsh conditions where other types of detection systems might be rendered inadequate.
	Non-conductive: The droplet size is less than 100 microns. Such a small-sized droplet has lower kinetic energy. Being light, it floats in the air and is non-conductive up to 35kva.
	International Standards: Built to Ceasefire's high standards, which are in compliance with international quality standards.

	Post-fire Damage Reduction: About 80% of the damages resulting from a fire are not caused directly by the flames, but by the extinguishing agent. Watermist, with an appropriate degree of dispersion, fully evaporates in the fire environment and leaves no residue behind.
	Extra Security for People: The small droplets of mist fall over a large surface, creating a perfect barrier against thermal radiation, thus providing effective protection against fire for firefighters and people in the vicinity.
	Alternative to Traditional Sprinkler Systems: This system can potentially replace a building's sprinkler system as it works faster than water, resulting in less fire damage and doesn't soak the premises in the process of putting out the fire.

NOZZLE TECHNICAL SPECIFICATIONS

DETAIL SPECIFICATION OF WATERMIST NOZZLES

NCSFH NOZZLES (OPEN)

S. NO.	NOZZLE DESCRIPTION	NOZZLE NO.	PRODUCT IMAGE	MODEL NO.	X (KIND OF MATERIAL)	Y (KIND OF CAP)	BASIC EXTINGUISHING MEDIA	NET FILTER OPENING	DROPLET SIZE D_v
1	Net Filter Circle Single Fluid Head	CF-NCSFH 08.X.Y		08	1 stainless steel (316) 2 stainless steel (304) 3 brass (C37800) 4 brass (CuZn36Pb2As)	0 without cap 1 silicone protection cap 2 stainless steel protection cap	Water	0.4 x 0.4 mm	55 - 100 µm
2	Net Filter Circle Single Fluid Head	CF-NCSFH 10.X.Y		10			Water	0.4 x 0.4 mm	55 - 100 µm
3	Net Filter Circle Single Fluid Head	CF-NCSFH 11.X.Y		11			Water	0.4 x 0.4 mm	55 - 95 µm
4	Net Filter Circle Single Fluid Head	CF-NCSFH 16.X.Y		16			Water	0.4 x 0.4 mm	55 - 80 µm
5	Net Filter Circle Single Fluid Head	CF-NCSFH 19.X.Y		19			Water	0.4 x 0.4 mm	55 - 130 µm
6	Net Filter Circle Single Fluid Head	CF-C-FSFH 04.X.Y	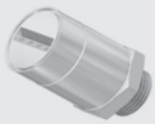	04	1 stainless steel (316) 2 stainless steel (304) 3 brass (C37800) 4 brass (CuZn36Pb2As)	0 without cap 1 silicone protection cap 2 stainless steel protection cap	Water	0.4 x 0.4 mm	55 - 95 µm
7	Net Filter Circle Single Fluid Head	NCSFH 05.X.Y		05			Water	0.4 x 0.4 mm	55 - 90 µm
8	Net Filter Circle Single Fluid Head	CF-NCSFH 29.X.Y Transformer protection		29			Water	0.4 x 0.4 mm	50 - 65 µm
9	Net Filter Circle Single Fluid Head	CF-NCSFH 24.X.Y		24			Water	0.4 x 0.4 mm	65 - 85 µm

						EFFECTIVE DISTANCE FROM OBJECT/SURFACE		DIA. OF SPRAY PATTERN				DISCHARGE THROUGH NOZZLE FOR ROTOR BASE SYSTEM
CONNECTION SIZE	INLET PRESSURE	K FACTOR	NUMBER OF ORIFICE PAIRS	NO. OF HOLE RINGS	HEAD WEIGHT	MIN.	MAX.	AT 0.5 M FROM NOZZLE	AT 1.0 M FROM NOZZLE	AT 3.0 M FROM NOZZLE	AT 5.0 M FROM NOZZLE	
1/2" BSP ext.	6-16 BAR	3	4	-	0.2 KG	0.5 M	5.0 M	ϕ 0.75 M	ϕ 0.95 M	ϕ 1.1 M	ϕ 1.2 M	7.5 LPM @ 6 BAR TO 12 LPM @ 16 BAR WATER ONLY
1/2" BSP ext.	6-16 BAR	2.2	4	-	0.2 KG	0.5 M	0.5.0 M	ϕ 0.75 M	ϕ 0.95 M	ϕ 1.1 M	ϕ 1.2 M	5.4 LPM
1/2" BSP ext.	6-16 BAR	1.8	4	-	0.2 KG	0.5 M	5.0 M	ϕ 0.5 M	ϕ 0.65 M	ϕ 0.85 M	ϕ 0.95 M	4.4 LPM
1/2" BSP ext.	6-16 BAR	2.9	6	-	0.2 KG	0.5 M	5.0 M	-	ϕ 1.2 M	ϕ 1.35 M	ϕ 1.65 M	7 LPM @ 6 BAR TO 11.6 LPM @ 16 BAR WATER ONLY
1/2" BSP ext.	6-16 BAR	4.2	6	-	0.2 KG	0.5 M	5.0 M	-	ϕ 0.95 M	ϕ 1.65 M	ϕ 1.85 M	10.5 LPM
1/2" BSP ext.	6-16 BAR	2.05	4	-	0.2 KG	0.6 M	2.0 M	0.5/ 0.2 M	0.6/ 0.3 M	0.8/ 0.35 M at 2 mtr.	N/A	5.1 LPM
1/2" BSP ext.	6-16 BAR	4.9	6	-	0.2 KG	1.0 M	5.0 M	-	ϕ 0.9 M at 1.5 mtr.	ϕ 1.3 M at 3.5 mtr	ϕ 1.6 M	12 LPM
1/2" BSP male	6-16 BAR	3.9	4	-	0.2 KG	1.0 M	4.0 M	-	ϕ 1.25 M	ϕ 1.45 M at 2.5 mtr	ϕ 1.6 M at 4.0 mtr	9.4 LPM @ 6 BAR TO 16 LPM @ 16 BAR WATER ONLY
1/2" BSP male	6-16 BAR	6.75	9	-	0.2 KG	1.0 M	5.0 M	-	ϕ 0.55 M	ϕ 10.8 M	ϕ 0.9 M	16.5 LPM @ 6 BAR TO 27 LPM @ 15 BAR WATER ONLY

DETAIL SPECIFICATION OF WATERMIST NOZZLES

CSSFH NOZZLES (OPEN)

S. NO.	NOZZLE DESCRIPTION	NOZZLE NO.	PRODUCT IMAGE	MODEL NO.	X (KIND OF MATERIAL)	Y (KIND OF CAP)	BASIC EXTINGUISHING MEDIA	NET FILTER OPENING	DROPLET SIZE D_v
10	CSSFH - Colliding nozzle	CF-CSSFH 01.S Engine protection		01	Stainless steel (304)	-	Water (Rotor mist)	0.4 x 0.4 mm	80 - 110 µm
11	CSSFH - Colliding nozzle	CF-CSSFH 02.S		02	Stainless steel (304)	-	Water (Rotor mist)	0.4 x 0.4 mm	85 - 120 µm
12	CSSFH - Colliding nozzle	CF-CSSFH 03.S		03	Stainless steel (304)	-	Water	0.4 x 0.4 mm	85 - 120 µm
13	NCSSFH - Colliding nozzle	CF-NCSSFH 31		31	Stainless steel	-	Water	0.6 x 0.6 mm and 0.4 x 0.4 mm	35 - 250 µm
14	NCSSFH - Colliding nozzle	CF-NCSSFH 32		32	Stainless steel	-	Water	0.6 x 0.6 mm and 0.4 x 0.4 mm	35 - 250 µm
15	NCSSFH - Colliding nozzle	CF-NCSSFH 33		33	Stainless steel	-	Water	0.6 x 0.6 mm and 0.4 x 0.4 mm	35 - 250 µm
16	NCSSFH - Colliding nozzle	CF-NCSSFH 34		34	Stainless steel	-	Water	0.6 x 0.6 mm and 0.4 x 0.4 mm	35 - 250 µm

CONNECTION SIZE	INLET PRESSURE	K FACTOR	NUMBER OF ORIFICE PAIRS	NO. OF HOLE RINGS	HEAD WEIGHT	EFFECTIVE DISTANCE FROM OBJECT/SURFACE MIN.	EFFECTIVE DISTANCE FROM OBJECT/SURFACE MAX.	DIA. OF SPRAY PATTERN AT 0.5 M FROM NOZZLE	DIA. OF SPRAY PATTERN AT 1.0 M FROM NOZZLE	DIA. OF SPRAY PATTERN AT 3.0 M FROM NOZZLE	DIA. OF SPRAY PATTERN AT 5.0 M FROM NOZZLE	DISCHARGE THROUGH NOZZLE FOR ROTOR BASE SYSTEM
1/2" BSP male	4 - 16 BAR	4.7	6 placed on ½ of the nozzle's surface	-	0.2 KG	0.4 M		12 sq. mtr.				9.8 LPM @ 4 BAR TO 19 LPM @ 15 BAR WATER ONLY
1/2" BSP male	4 - 16 BAR	2.45	3 placed on ½ of the nozzle's surface	-	0.2 KG	1.0 M		8 sq. mtr. Special disharge pattern				4.9 LPM @ 4 BAR TO 9.5 LPM @ 15 BAR WATER ONLY
1/2" BSP male	4 - 16 BAR	21	12	-	0.2 KG	Upright type					7 sq.m at 4 mtr	42 LPM @ 4 BAR TO 81.33 LPM @ 15 BAR WATER ONLY
¾" BSP male	Max 10 bar	76	3 X 12 (circular) + 4 (front)	-	0.35 kg	-	4.0 M	Sq. 6.0 x 6.5 m				152 LPM @ 4 BAR TO 240.5 LPM @ 10 BAR WATER ONLY
¾" BSP male	Max 10 bar	88.7	3 X 12 (circular) + 4 (front)	-	0.35 kg	-	4.0 M	Sq. 7.0 x 7.5 m				177.5 LPM @ 4 BAR TO 251 LPM @ 8 BAR WATER ONLY
¾" BSP male	Max 10 bar	103.3	3 X 12 (circular) + 4 (front)	-	0.35 kg	-	4.0 M	Sq. 8.5 x 9.5 m				206 LPM @ 4 BAR TO 252 LPM @ 6 BAR WATER ONLY
¾" BSP male	Max 10 bar	121.75	3 X 12 (circular) + 4 (front)	-	0.35 kg	-	4.0 M	Sq. 12.0 x 8.0 m				243.5 LPM @ 4 BAR TO 298 LPM @ 6 BAR WATER ONLY

DETAIL SPECIFICATION OF WATERMIST NOZZLES

GWP NOZZLES (OPEN)

S. NO.	NOZZLE DESCRIPTION	NOZZLE NO.	PRODUCT IMAGE	MODEL NO.	X (KIND OF MATERIAL)	Y (KIND OF CAP)	BASIC EXTINGUISHING MEDIA	NET FILTER OPENING	DROPLET SIZE D_v
17	Net Filter Head Multi Pairs	CF-NGWP-1		1	1 stainless steel (316) 2 stainless steel (304) 3 brass (C37800) 4 brass (CuZn36Pb2As)	0 without cap 1 silicone protection cap	Water	0.4 x 0.4 mm	50 - 130 µm
18	Net Filter Head Multi Pairs	CF-NGWP-9		9			Water	0.4 x 0.4 mm	50 - 130 µm
19	Net Filter Head Multi Pairs	CF-NGWP-11		11			Water	0.4 x 0.4 mm	50 - 130 µm
20	Net Filter Head Multi Pairs	CF-NGWP-14		14			Water	0.4 x 0.4 mm	50 - 130 µm
21	Net Filter Head Multi Pairs	CF-NGWP-15		15			Water	0.4 x 0.4 mm	70 - 130 µm
22	Net Filter Head Multi Pairs	CF-NGWP 32 X.Y		32	1 stainless steel (316) 2 stainless steel (304) 3 brass (C37800) 4 brass (CuZn36Pb2As)	0 without cap 1 silicone protection cap	Water	0.4 x 0.4 mm	65 - 90 µm
23	Net Filter Head Multi Pairs	CF-NGWP 34 X.Y		34			Water	0.4 x 0.4 mm	65 - 85 µm
24	Net Filter Head Multi Pairs	CF-NGWP 35 X.Y		35			Water	0.4 x 0.4 mm	80 - 105 µm
25	Net Filter Head Multi Pairs	CF-NGWP 36 X.Y		36			Water	0.4 x 0.4 mm	95 - 125 µm
26	Net Filter Head Multi Pairs	CF-NGWP 49 .Y		49	Stainless steel (304)	0 without cap	Water	0.4 x 0.4 mm	60 - 125 µm
27	Tunnel Nozzle T1	CF-T1		T1	Stainless steel	0 without cap	Water	-	100 - 400 µm

CONNECTION SIZE	INLET PRESSURE	K FACTOR	NUMBER OF ORIFICE PAIRS	NO. OF HOLE RINGS	HEAD WEIGHT	EFFECTIVE DISTANCE FROM OBJECT/SURFACE		DIA. OF SPRAY PATTERN				DISCHARGE THROUGH NOZZLE FOR ROTOR BASE SYSTEM
						MIN.	MAX.	AT 0.5 M FROM NOZZLE	AT 1.0 M FROM NOZZLE	AT 3.0 M FROM NOZZLE	AT 5.0 M FROM NOZZLE	
3/4" BSP ext.	6 - 16 BAR	14.8	-	2	0.5 KG	1.0 M	5.0 M	-	ϕ 1.7 M	ϕ 1.8 M	ϕ 1.8 M	36.2 LPM @ 6 BAR TO 59.5 LPM @ 16 BAR WATER ONLY
3/4" BSP ext.	6 - 16 BAR	9.5	-	1	0.5 KG	1.5 M	5.0 M	-		ϕ 4.4/5.1 M		23 LPM
3/4" BSP int.	6 - 16 BAR	12.7	-	1	0.5 KG	1.0 M	5.0 M	-	ϕ 3.8/4.7 M			30.5 LPM @ 6 BAR TO 51.56 LPM @ 16 BAR WATER ONLY
3/4" BSP int.	6 - 16 BAR	14.7	-	2	0.5 KG	1.0 M	5.0 M	-	ϕ 2.2/3.6 M			36 LPM
3/4" BSP int.	6 - 16 BAR	6.6	-	1	0.5 KG	0.5 M	4.0 M	ϕ 2:1 M		ϕ 3.5 M	ϕ 4.2 M	16.1 LPM @ 51.5 BAR TO 26.7 LPM @ 16 BAR WATER ONLY
3/4" BSP int.	6 - 16 BAR	13.4	-	-	0.4 KG	1.5 M	5.0 M		ϕ 5.3 M		ϕ 5.5 M	32.8 LPM @ 6 BAR TO 53.6 LPM @ 16 BAR WATER ONLY
3/4" BSP int.	4 - 12 BAR	15	-	-	0.4 KG	1.5 M	5.0 M		ϕ 4.5 M		ϕ 4.7 M	30 LPM @ 4 BAR TO 52 LPM @ 12 BAR WATER ONLY
3/4" BSP int.	4 - 16 BAR	12	-	-	0.5 KG	0.35 M	4.0 M	ϕ 5.5 M			ϕ 6.0 M	24 LPM @ 4 BAR TO 46.5 LPM @ 15 BAR WATER ONLY
3/4" BSP int.	4 - 16 BAR	15	-	-	0.4 KG	1.5 M	5.0 M		ϕ 4.6 M		ϕ 4.8 M	30 LPM @ 4 BAR TO 52 LPM @ 12 BAR WATER ONLY
3/4" BSP ext.	4 - 15 BAR	29.9	-	-	0.35 KG	1.5 M	5.0 M		ϕ 3.2 M		ϕ 4.6 M	59.8 LPM @ 4 BAR TO 115.8 LPM @ 15 BAR WATER ONL
3/4" BSP int.	4 - 6 BAR	90	-	-	1 KG	-	-	Elip. 10 x 8 m				170 LPM @ 4 BAR TO 230 LPM @ 6 BAR WATER ONLY

DETAIL SPECIFICATION OF WATERMIST NOZZLES

GWP NOZZLES WITH HEAT SENSING BULB (CLOSED)

S. NO.	NOZZLE DESCRIPTION	NOZZLE NO.	PRODUCT IMAGE	MODEL NO.	X (KIND OF MATERIAL)	Y (KIND OF CAP)	BASIC EXTINGUISHING MEDIA	NET FILTER OPENING	DROPLET SIZE D_v
28	Detection Head Multi Pairs	CF-DGWP 9.X.Y		9	1 stainless steel (316) 2 stainless steel (304) 3 brass (C37800) 4 brass (CuZn36Pb2As)	0 without cap 1 silicone protection cap	Water	0.4 x 0.4 mm	50 - 130 µm
29	Detection Head Multi Pairs	CF-DGWP 15.X.Y		15			Water	0.4 x 0.4 mm	65 - 140 µm
30	Detection Head Multi Pairs	CF-DGWP 16.X.Y		16			Water	0.4 x 0.4 mm	55 - 135 µm
31	Detection Head Multi Pairs	CF-DGWP 17.X.Y		17	1 stainless steel (316) 2 stainless steel (304) 3 brass (C37800) 4 brass (CuZn36Pb2As)	0 without cap 1 silicone protection cap	Water	0.4 x 0.4 mm	55 - 135 µm
32	Detection Head Multi Pairs	CF-DGWP 44.X.Y		44			Water	0.4 x 0.4 mm	65 - 95 µm
33	Detection Head Multi Pairs	CF-DGWP 46.X.Y		46	Stainless steel (316)		Water	0.4 x 0.4 mm	105 - 120 µm
34	Detection Head Multi Pairs	CF-DGWP 49.X.Y		49	Stainless steel (316)		Water	0.4 x 0.4 mm	115 - 125 µm
35	Detection Head Multi Pairs	CF-DGWP 62.X.Y		62	Stainless steel (316)		Water	0.4 x 0.4 mm	45 axis, 135 stream edge

CONNECTION SIZE	INLET PRESSURE	K FACTOR	NUMBER OF ORIFICE PAIRS	NO. OF HOLE RINGS	HEAD WEIGHT	EFFECTIVE DISTANCE FROM OBJECT/SURFACE		DIA. OF SPRAY PATTERN				DISCHARGE THROUGH NOZZLE FOR ROTOR BASE SYSTEM
						MIN.	MAX.	AT 0.5 M FROM NOZZLE	AT 1.0 M FROM NOZZLE	AT 3.0 M FROM NOZZLE	AT 5.0 M FROM NOZZLE	
1/2" BSP ext.	6-16 BAR	8.6	-	1	0.5 KG	1.5 M	5.0 M	-	ϕ 4.3 M	ϕ 4.3 M	ϕ 4.3 M (Max. dia 5.0 m at 16 bar)	21.1 LPM @ 6 BAR TO 34.4 LPM @ 16B AR WATER ONLY
1/2" BSP ext.	6-16 BAR	6.55	-	1	0.5 KG	0.4 M	4.0 M	ϕ 4.3 M	ϕ 3.2 M at 1.5 m		ϕ 4.2 M	16.1 LPM @ 6 BAR TO 26.4 LPM @ 16BAR WATER ONLY
1/2" BSP ext.	6-16 BAR	5.8	-	1	0.5 KG	0.4 M	3.0 M	Elip. 1 x 0.6 M	Elip. 1.9 x 0,95 M at 1.5 m		Elip. 2.3 x 1.0 M	14.2 LPM @ 6 BAR TO 23.2 LPM @ 16BAR WATER ONLY
1/2" BSP ext.	6-16 BAR	4.4	-	1	0.5 KG	0.5 M	4.0 M	ϕ 2.2 M	ϕ 3.2 M at 2.0 m		ϕ 3.25 M	10.8 LPM @ 6 BAR TO 17.6 LPM @ 16BAR WATER ONLY
1/2" BSP male	6-15 BAR	5.68	-	-	0.35 KG	0.6 M	4.0 M	ϕ 2.0 M			ϕ 3.2 M at 4.0 mtr	13.9 LPM @ 6 BAR TO 22 LPM @ 15 BAR WATER ONLY
1/2" BSP male	4-12 BAR	15.5	-	-	0.35 KG	1.0 M	5.0 M	-	ϕ 2.75 M		ϕ 4.75 M (12 Sq.m)	35 LPM @ 4 BAR TO 43 LPM @ 6 BAR WATER ONLY
3/4" BSP male	4-6 BAR	25.8	-	-	0.35 KG	1.0 M	5.0 M	-	ϕ 2.75 M		ϕ 4.75 M (12 Sq.m)	57.6 LPM @ 4 BAR TO 70.5 LPM @ 6 BAR WATER ONLY
3/4" BSP male	4-12 BAR	25.6	-	-	0.65 KG	-	-	ϕ 1.2 M at 2.5 m				51.5 LPM @ 4 BAR TO 88.5 LPM @ 12 BAR WATER ONLY

CF-NCSFH 08 NOZZLE
Data Sheet

Full description: CFNCSFH 08.X.Y

CFNCSFH - Net Filter Circle Single Fluid Head
08 - Model number
X - Kind of material:
1 stainless steel (316)
2 stainless steel (304)
3 brass (C37800)
4 brass (CuZn36Pb2As)

Y - 0 without cap
1 silicon protection cap
2 stainless steel protection cap

System Type:

Application:

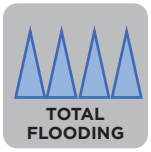

CFNCSFH 08.1.0

CFNCSFH 08.1 .1

CFNCSFH 08.1.2

TECHNICAL PARAMETERS

Basic extinguishing media	:	Water
Net filter opening	:	0,4 x 0.4 mm
Droplet size Dv	:	505 – 110 µm
Connection size	:	½" BSP ext.
Inlet pressure	:	6 - 16 bar
K factor	:	3,0
Number of orifice pairs	:	4
Head weight	:	0,2 kg
Protection cap	:	Silicon cap Cat. No. - N 116 SS cap Cat. No. - K 059

Design instructions are included in design manual. Our products are being constantly developed and improved, therefore we reserve the right to change technical specifications without prior notice.

TECHNICAL DETAILS

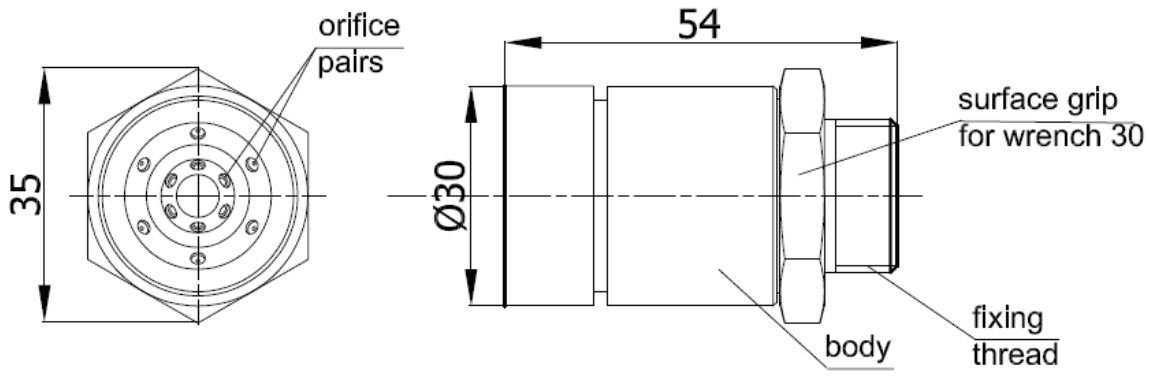

MIST STREAM

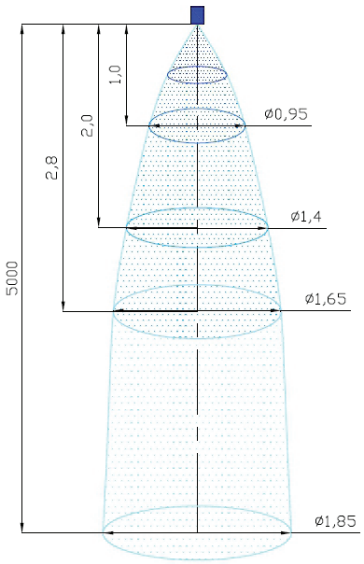

MIST STREAM PARAMETERS

Working pressure [bar]	:	6	8	12	16
K flow factor	:		3,0		
Extinguishing agent expenditure [lit/min]	:	7,5	8,5	10,5	12,0
Effective stream range * [m]	:	1,6	1,8	2,1	2,4

***Range of horizontal stream.**
Our products are being constantly developed and improved, therefore we reserve the right to change technical specifications without prior notice.

CF-NCSFH 10 NOZZLE
Data Sheet

Full description: CFNCSFH 10.X.Y

CFNCSFH - Net Filter Circle Single Fluid Head
10 - Model number
X - Kind of material:
1 stainless steel (316)
2 stainless steel (304)
3 brass (C37800)
4 brass (CuZn36Pb2As)

Y - 0 without cap
1 silicon protection cap
2 stainless steel protection cap

System Type:

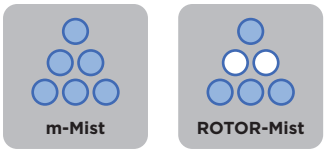

Application:

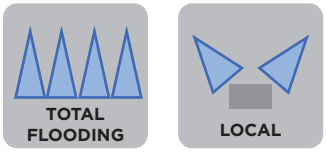

CFNCSFH 10.1.0

CFNCSFH .10.1

CFNCSFH 10.1.2

TECHNICAL PARAMETERS

Total flow surface	:	4,7 mm²
Basic extinguishing media	:	Water, gas and water (ROTOR)
Net filter opening	:	0,4 x 0,4 mm
Connection size	:	½" BSP ext.
Inlet pressure	:	6 -1 6 bar
Number of orifice pairs	:	4
Head weight	:	0,2 kg
Protection cap	:	Silicon cap Cat. No. - N 116 SS cap Cat. No. - K 059

Design instructions are included in design manual. Our products are being constantly developed and improved, therefore we reserve the right to change technical specifications without prior notice.

TECHNICAL DETAILS

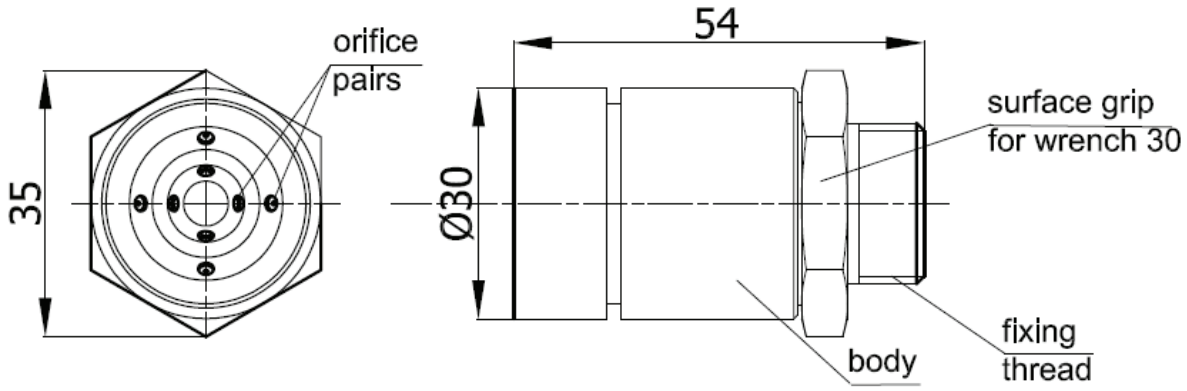

MEDIUM PRESSURE SYSTEM - MIST STREAM

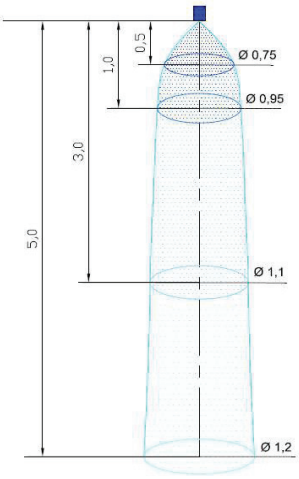

MEDIUM PRESSURE SYSTEM - MIST STREAM PARAMETERS						
Working pressure [bar]	:	6	8		12	16
Droplet size Dv [µm]	:		55 - 100			
K flow factor	:		2,2			
Extinguishing agent expenditure [lit/min]	:	5,4	6,2		7,6	8,8
Effective stream range * [m]	:	1,4	1,6		2,1	2,8

ROTOR MIST SYSTEM - MIST STREAM

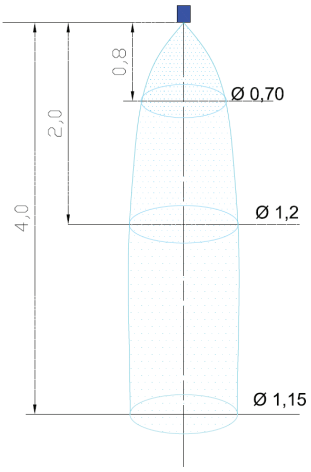

ROTOR MIST SYSTEM - MIST STREAM PARAMETERS	
Initial pressure of work [bar]	: 15
Droplet size Dv [µm]	: 50-95
Extinguishing agent expenditure** [lit/30 s]	: 5,75
The minimum distance required to develop a stream of Watermist [m]	: 0,4
Effective stream range *** [m]	: 3,0

***Range of horizontal stream. | **The value of information only. | ***Measurement in 30 seconds of action.**
Our products are being constantly developed and improved, therefore we reserve the right to change technical specifications without prior notice.

CF-NCSFH 11 NOZZLE
Data Sheet

Full description: CFNCSFH 11.X.Y

CFNCSFH - Net Filter Circle Single Fluid Head
11 - Model number
X - Kind of material:
1 stainless steel (316)
2 stainless steel (304)
3 brass (C37800)
4 brass (CuZn36Pb2As)

Y - 0 without cap
1 silicon protection cap
2 stainless steel protection cap

System Type:

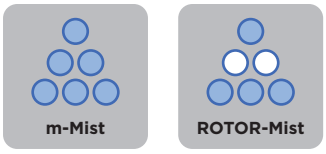

Application:

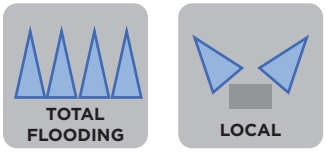

CFNCSFH 11.1.0

CFNCSFH 11.1.1

CFNCSFH 11.1.2

TECHNICAL PARAMETERS

Total flow surface	:	3,7 mm²
Basic extinguishing media	:	Water, gas and water (ROTOR)
Net filter opening	:	0,4 x 0,4 mm
Connection size	:	½" BSP ext.
Inlet pressure	:	6 - 16 bar
Number of orifice pairs	:	4
Head weight	:	0,2 kg
Protection cap	:	Silicon cap Cat. No. - N 116 SS cap Cat. No. - K 059

Design instructions are included in design manual. Our products are being constantly developed and improved, therefore we reserve the right to change technical specifications without prior notice.

TECHNICAL DETAILS

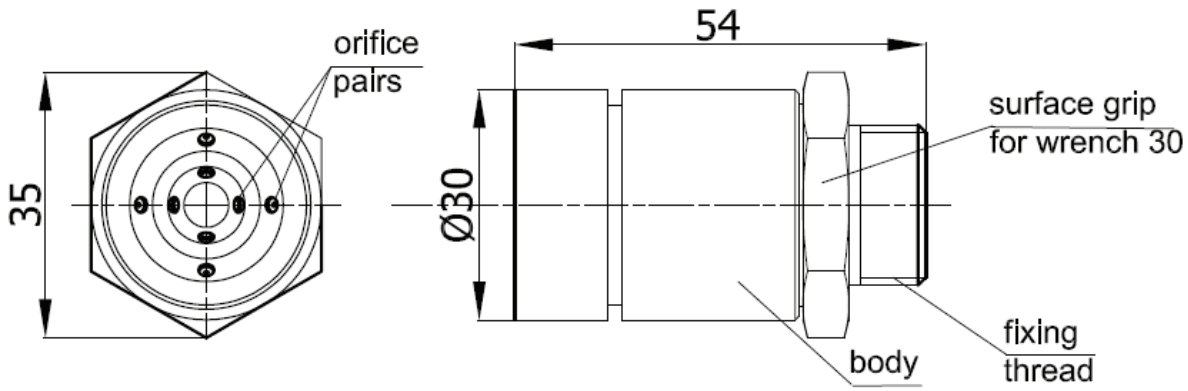

MEDIUM PRESSURE SYSTEM - MIST STREAM

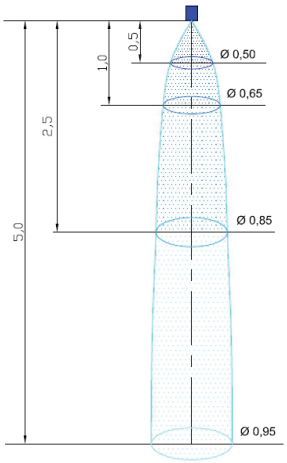

MEDIUM PRESSURE SYSTEM - MIST STREAM PARAMETERS					
Working pressure [bar]	: 6	8		12	16
Droplet size Dv [µm]	:		55 - 95		
K flow factor	:		1,8		
Extinguishing agent expenditure [lit/min]	: 4,4	5,1		6,2	7,2
Effective stream range * [m]	: 1,6	1,8		2,2	2,5

ROTOR MIST SYSTEM - MIST STREAM

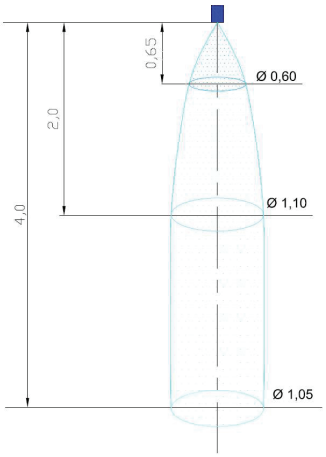

ROTOR MIST SYSTEM - MIST STREAM PARAMETERS	
Initial pressure of work [bar]	: 15
Droplet size Dv [µm]	: 50-90
Extinguishing agent expenditure** [lit/30 s]	: 5,15
The minimum distance required to develop a stream of Watermist [m]	: 0,3
Effective stream range *** [m]	: 2,8

*** Range of horizontal stream. | ** The value of information only. | *** Measurement in 30 seconds of action.**
Our products are being constantly developed and improved, therefore we reserve the right to change technical specifications without prior notice.

CF-NCSFH 16 NOZZLE
Data Sheet

Full description: CFNCSFH 16.X.Y

CFNCSFH - Net Filter Circle Single Fluid Head
16 - Model number
X - Kind of material:
1 stainless steel (316)
2 stainless steel (304)
3 brass (C37800)
4 brass (CuZn36Pb2As)

Y - 0 without cap
1 silicon protection cap
2 stainless steel protection cap

System Type:

Application:

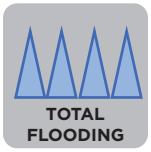

CFNCSFH 16.1.0

CFNCSFH 16.1.1

CFNCSFH 16.1.2

TECHNICAL PARAMETERS

Basic extinguishing media	:	Water
Net filter opening	:	0,4 x 0,4 mm
Droplet size Dv	:	55 – 80 µm
Connection size	:	½" BSP ext.
Inlet pressure	:	6 - 16 bar
K factor	:	2,9
Number of orifice pairs	:	6
Head weight	:	0,2 kg
Protection cap	:	Silicon cap Cat. No. - N 116 SS cap Cat. No. - K 059

Design instructions are included in design manual. Our products are being constantly developed and improved, therefore we reserve the right to change technical specifications without prior notice.

TECHNICAL DETAILS

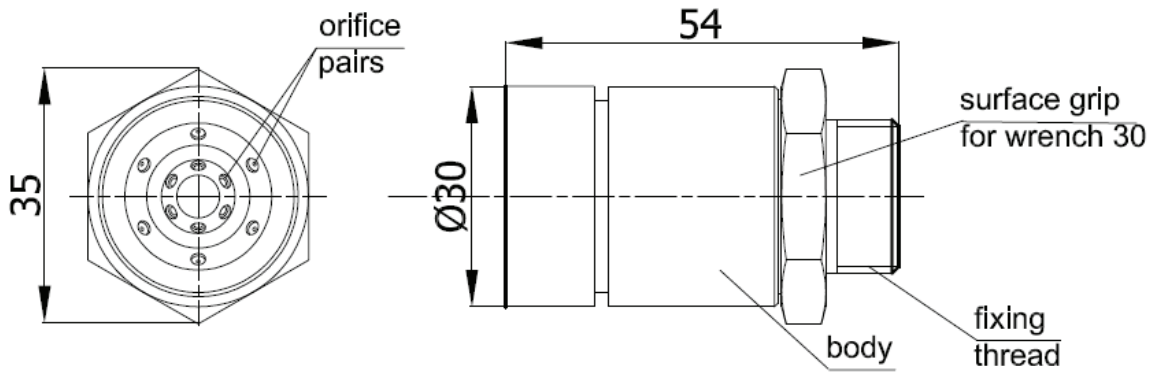

MIST STREAM

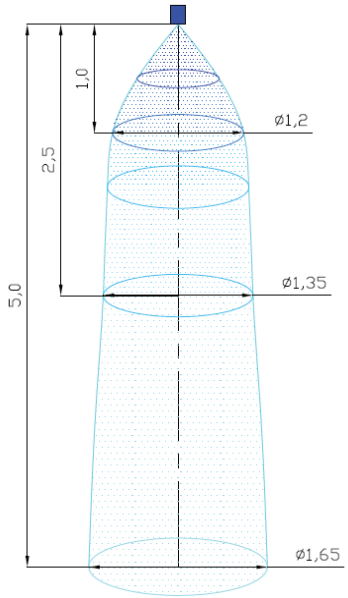

MIST STREAM PARAMETERS

Working pressure [bar]	:	6	8	12	16
K flow factor	:		2,9		
Extinguishing agent expenditure [lit/min]	:	7,1	8,2	10,0	11,6
Effective stream range * [m]	:	1,3	1,5	1,9	2,3

***Range of horizontal stream.**
Our products are being constantly developed and improved, therefore we reserve the right to change technical specifications without prior notice.

CF-NCSFH 19 NOZZLE
Data Sheet

Full description: CFNCSFH 19.X.Y

CFNCSFH - Net Filter Circle Single Fluid Head
19 - Model number
X - Kind of material:
1 stainless steel (316)
2 stainless steel (304)
3 brass (C37800)
4 brass (CuZn36Pb2As)

Y - 0 without cap
1 silicon protection cap
2 stainless steel protection cap

System Type:

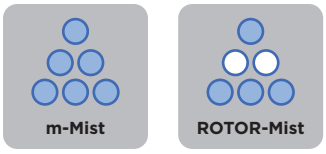

Application:

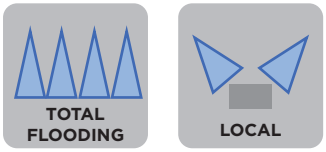

CFNCSFH 19.1.0

CFNCSFH 19.1.1

CFNCSFH 19.1.2

TECHNICAL PARAMETERS

Total flow surface	:	8,45 mm²
Basic extinguishing media	:	Water, gas and water (ROTOR)
Net filter opening	:	0,4 x 0,4 mm
Connection size	:	½" BSP ext.
Inlet pressure	:	6 - 16 bar
Number of orifice pairs	:	6
Head weight	:	0,2 kg
Protection cap	:	Silicon cap Cat. No. - N 116 SS cap Cat. No. - K 059

Design instructions are included in design manual. Our products are being constantly developed and improved, therefore we reserve the right to change technical specifications without prior notice.

TECHNICAL DETAILS

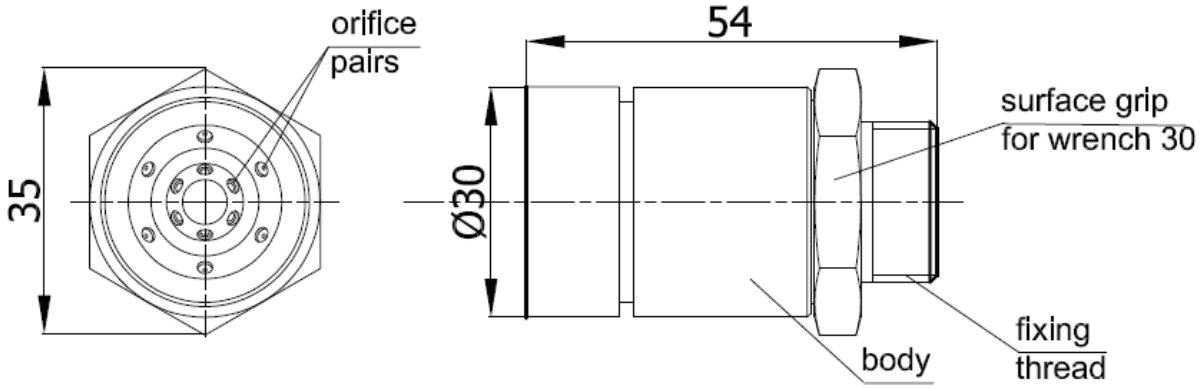

MEDIUM PRESSURE SYSTEM - MIST STREAM

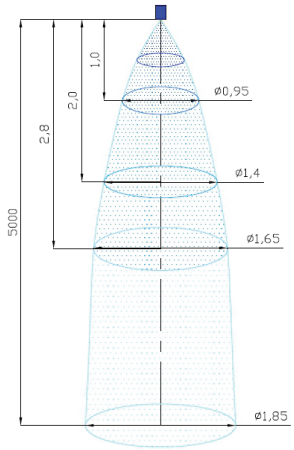

MEDIUM PRESSURE SYSTEM - MIST STREAM PARAMETERS						
Working pressure [bar]	:	6	8		12	16
Droplet size Dv [µm]	:		60 - 130			
K flow factor	:		4,2			
Extinguishing agent expenditure [lit/min]	:	10,5	12,0		14,5	16,5
Effective stream range * [m]	:	1,8	2,0		2,8	3,2

ROTOR MIST SYSTEM - MIST STREAM

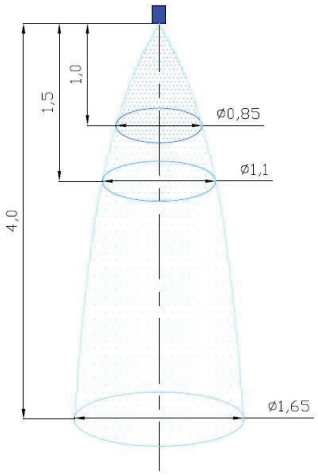

ROTOR MIST SYSTEM - MIST STREAM PARAMETERS	
Initial pressure of work [bar]	: 15
Droplet size Dv [µm]	: 55-120
Extinguishing agent expenditure** [lit/30 s]	: 7,8
The minimum distance required to develop a stream of Watermist [m]	: 0,4
Effective stream range *** [m]	: 2,9

*** Range of horizontal stream. | ** The value of information only. | *** Measurement in 30 seconds of action.**
Our products are being constantly developed and improved, therefore we reserve the right to change technical specifications without prior notice.

CF-C-FSFH 04 NOZZLE
Data Sheet

Full description: CFC-FSFH 04.X.Y

CFC-FSFH - Net Filter Circle Single Fluid Head
04 - Model number
X - Kind of material:
1 stainless steel (316)
2 stainless steel (304)
3 brass (C37800)
4 brass (CuZn36Pb2As)

Y - 0 without cap
1 silicon protection cap
2 stainless steel protection cap

System Type:

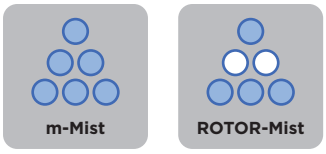

Application:

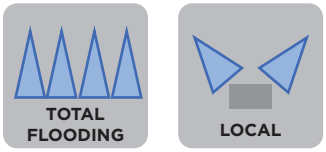

CFC-FSFH 03.1.0

CFC-FSFH 03.1.1

TECHNICAL PARAMETERS

Total flow surface	:	4,0 mm²
Basic extinguishing media	:	Water, gas and water (ROTOR)
Net filter opening	:	0,4 x 0,4 mm
Connection size	:	½" BSP ext.
Inlet pressure	:	6 - 16 bar
Number of orifice pairs	:	4
Head weight	:	0,2 kg
Protection cap	:	Silicon cap Cat. No. - N 116 SS cap Cat. No. - K 059

Design instructions are included in design manual. Our products are being constantly developed and improved, therefore we reserve the right to change technical specifications without prior notice.

TECHNICAL DETAILS

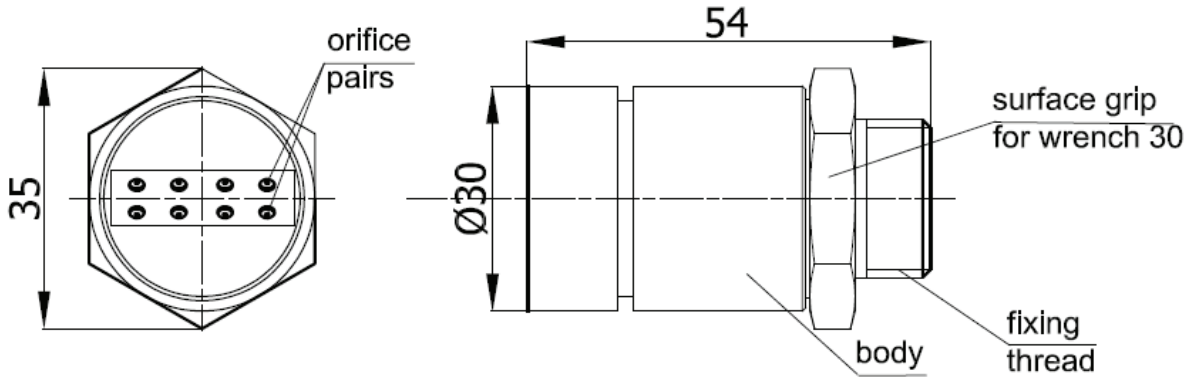

MEDIUM PRESSURE SYSTEM - MIST STREAM

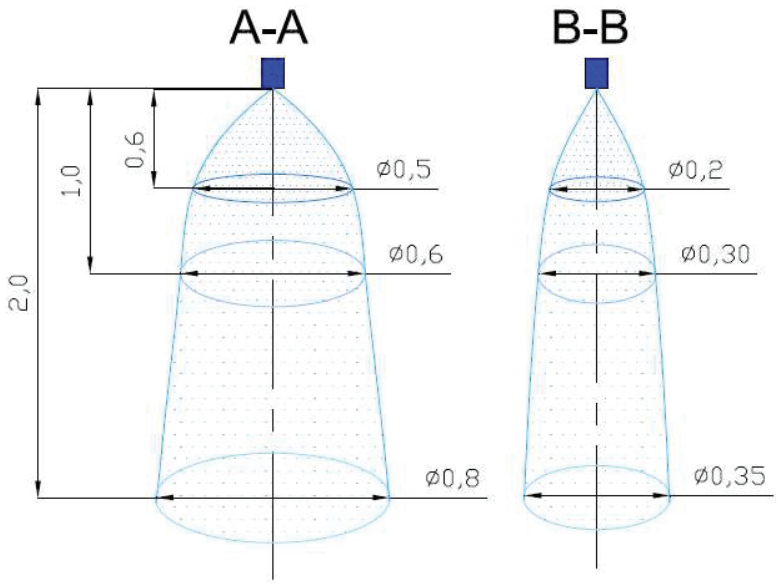

MEDIUM PRESSURE SYSTEM - MIST STREAM PARAMETERS

Working pressure [bar]	:	6	8	12	16
Droplet size Dv [µm]			55-95		
K flow factor	:		2,05		
Extinguishing agent expenditure [lit/min]	:	5,1	6,1	7,0	8,35
Effective stream range * [m]	A B	1,4 1,6	- -	- -	2,5 2,3

***Range of horizontal stream.**
Our products are being constantly developed and improved, therefore we reserve the right to change technical specifications without prior notice.

CF-NCSFH 05 NOZZLE
Data Sheet

Full description: CFNCSFH 05.X.Y

CFNCSFH - Net Filter Circle Single Fluid Head
05 - Model number
X - Kind of material:
1 stainless steel (316)
2 stainless steel (304)
3 brass (C37800)
4 brass (CuZn36Pb2As)

Y - 0 without cap
1 silicon protection cap
2 stainless steel protection cap

System Type:

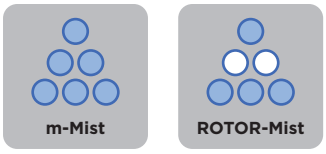

Application:

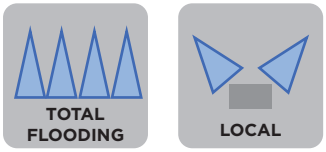

CFNCSFH 05.1.0

CFNCSFH 05.1.1

CFNCSFH 05.1.2

TECHNICAL PARAMETERS

Total flow surface	:	8,7 mm²
Basic extinguishing media	:	Water, gas and water (ROTOR)
Net filter opening	:	0,4 x 0,4 mm
Connection size	:	½" BSP ext.
Inlet pressure	:	6-16 bar
Number of orifice pairs	:	6
Head weight	:	0,2 kg
Protection cap	:	Silicon cap Cat. No. - N 116 SS cap Cat. No. - K 059

Design instructions are included in design manual. Our products are being constantly developed and improved, therefore we reserve the right to change technical specifications without prior notice.

TECHNICAL DETAILS

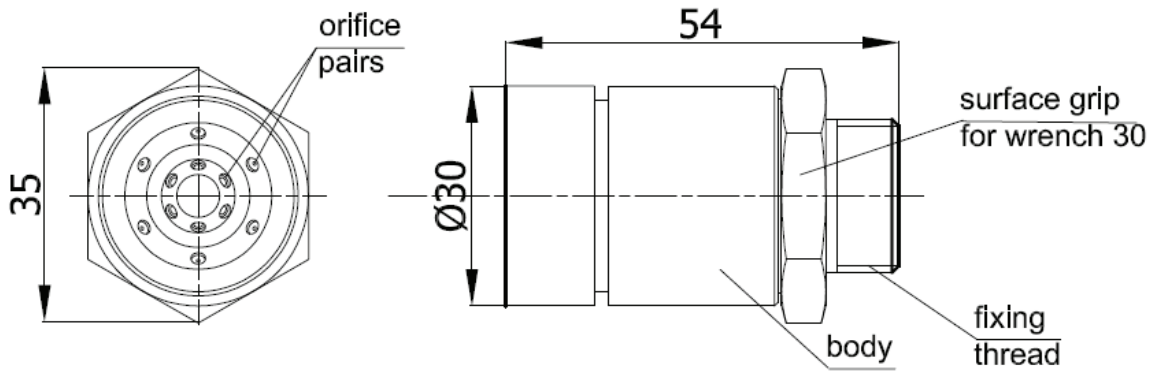

MIST STREAM

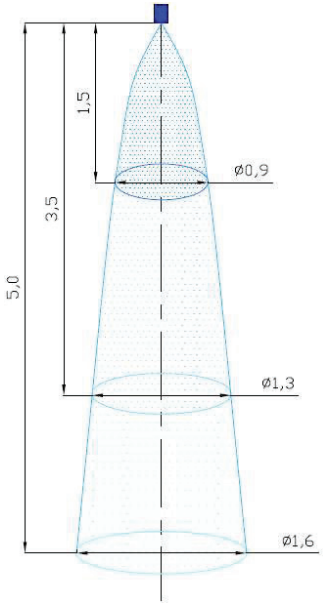

MIST STREAM PARAMETERS

Working pressure [bar]	:	6	8	12	16
Droplet size Dv [µm]			55 – 90		
K flow factor	:		4,9		
Extinguishing agent expenditure [lit/min]	:	12,0	13,85	17,0	19,6
Effective stream range * [m]	:	2,0	2,2,	3,0	3,6

***Range of horizontal stream.**
Our products are being constantly developed and improved, therefore we reserve the right to change technical specifications without prior notice.

CF-NCSFH 29 NOZZLE
Data Sheet

Full description: CFNCSFH 29.X.Y

CFNCSFH - Net Filter Circle Single Fluid Head
29 - Model number
X - Kind of material:
1 stainless steel (316)
2 stainless steel (304)
3 brass (C37800)
4 brass (CuZn36Pb2As)

Y - 0 without cap
1 silicon protection cap
2 stainless steel protection cap

System Type:

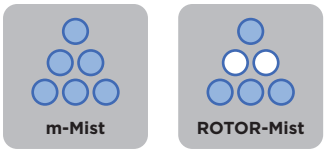

Application:

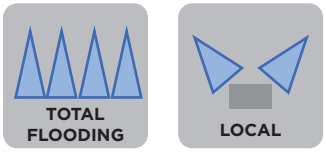

CFNCSFH 29.1.0

CFNCSFH 29.1.1

CFNCSFH 29.1.2

TECHNICAL PARAMETERS

Total flow surface	:	6,44 mm²
Basic extinguishing media	:	water or gas and water (RotoMist)
Filter mesh	:	0,4 x 0,4 mm
Connection size	:	½" BSP ext.
Inlet pressure	:	6-16 bar
Number of orifice pairs	:	4
weight	:	0,2 kg
Protection cap	:	Silicon cap Cat. No. - NA003 Steinless cap Cat. No. - NA001

Design instructions are included in design manual. Our products are being constantly developed and improved, therefore we reserve the right to change technical specifications without prior notice.

TECHNICAL DETAILS

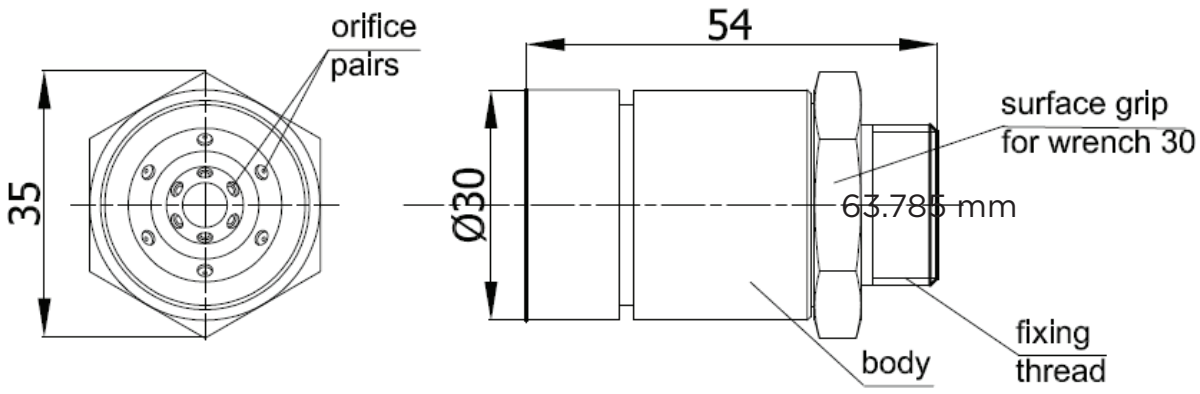

MEDIUM PRESSURE SYSTEM - MIST STREAM

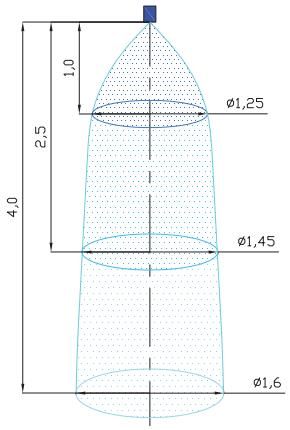

MEDIUM PRESSURE SYSTEM - MIST STREAM PARAMETERS					
Working pressure [bar]	:	6	8	12	16
Droplet size Dv [µm]	:	65	60		50
K flow factor	:		3,9		
Extinguishing agent flow rate * [lit/min]	:	9,4	10,5	14,5	16,0
Effective stream range** [m]	:	2,8	3,0	3,6	3,9

ROTOR MIST SYSTEM - MIST STREAM

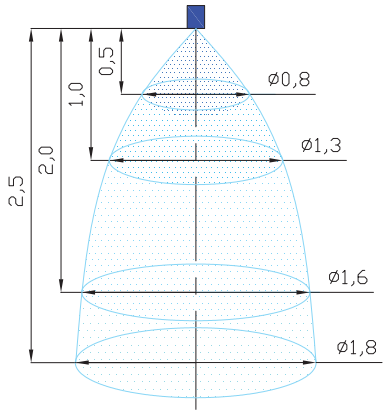

ROTOR MIST SYSTEM - MIST STREAM PARAMETERS	
Initial working pressure [bar]	: 15
Droplet size Dv [µm]	: 55-75
Minimum distance required to develop mist stream [m]	: 0,25
Effective stream range *** [m]	: 1,6

*** May vary ±5%. | ** Range of horizontal stream. | *** Measurement in 30 seconds of action.**
Our products are being constantly developed and improved, therefore we reserve the right to change technical specifications without prior notice.

CF-NCSFH 24 NOZZLE
Data Sheet

Full description: CFNCSFH 24.X.Y

CFNCSFH - Net Filter Circle Single Fluid Head
24 - Model number
X - Kind of material:
1 stainless steel (316)
2 stainless steel (304)
3 brass (C37800)
4 brass (CuZn36Pb2As)

Y - 0 without cap
1 silicon protection cap
2 stainless steel protection cap

System Type:

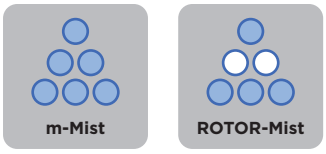

Application:

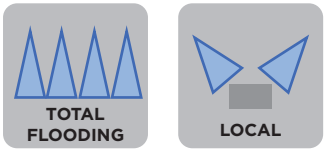

CFNCSFH 24.1.0

CFNCSFH 24.1.1

CFNCSFH 24.1.2

TECHNICAL PARAMETERS

Total flow surface	:	13,05 mm²
Basic extinguishing media	:	water
Filter mesh	:	0,4 x 0,4 mm
Connection size	:	½" BSP ext.
Inlet pressure	:	6-16 bar
Number of orifice pairs	:	9
Weight	:	0,2 kg
Protection cap	:	Silicon cap Cat. No. - NA003 Steinless cap Cat. No. - NA001

Design instructions are included in design manual. Our products are being constantly developed and improved, therefore we reserve the right to change technical specifications without prior notice.

TECHNICAL DETAILS

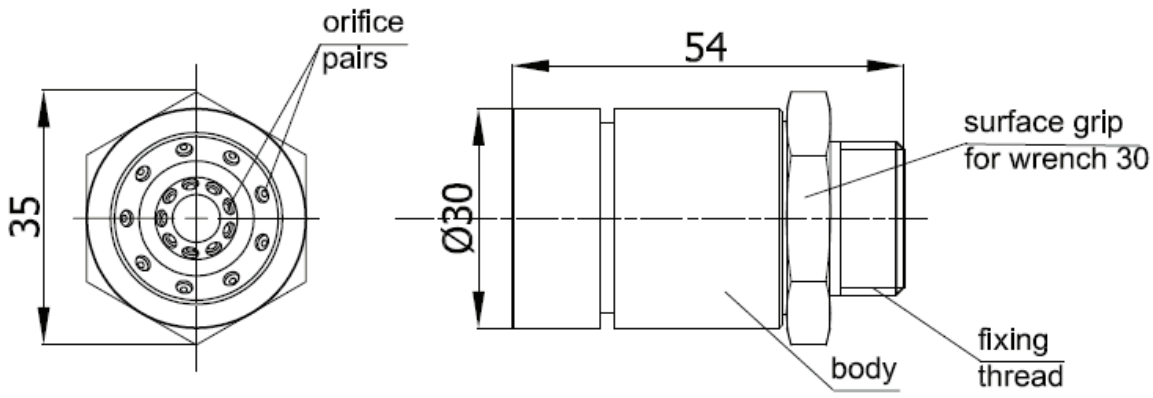

MEDIUM PRESSURE SYSTEM - MIST STREAM

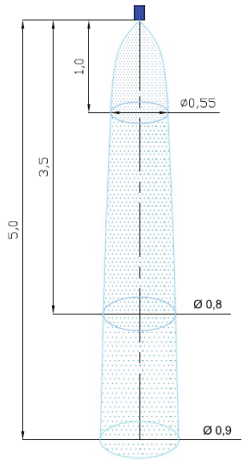

MEDIUM PRESSURE SYSTEM - MIST STREAM PARAMETERS						
Working pressure [bar]	:	6	8		12	16
Droplet size Dv [µm]	:	85		70		65
Average K flow factor	:			6,75		
Extinguishing agent flow rate * [lit/min]	:	16,5	19,1		23,4	27,0
Effective stream range** [m]	:	3,5	3,6		3,8	4,0

ROTOR MIST SYSTEM - MIST STREAM

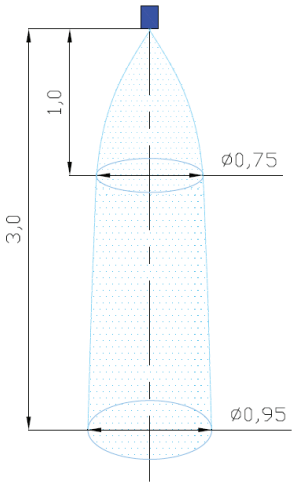

ROTOR MIST SYSTEM - MIST STREAM PARAMETERS	
Initial working pressure [bar]	: 15
Droplet size Dv [µm]	: 65-95
Minimum distance required to develop mist stream [m]	: 1,0
Effective stream range *** [m]	: 3,5

*** May vary ±5%. | ** Range of horizontal stream. | *** Measurement in 30 seconds of action.**
Our products are being constantly developed and improved, therefore we reserve the right to change technical specifications without prior notice.

CF-NCSSFH 01 NOZZLE
Data Sheet

Full Title: CFNCSSFH 01.S

CFNCSSFH - Colliding nozzle

01 - Model number

S - Stainless steel (304)

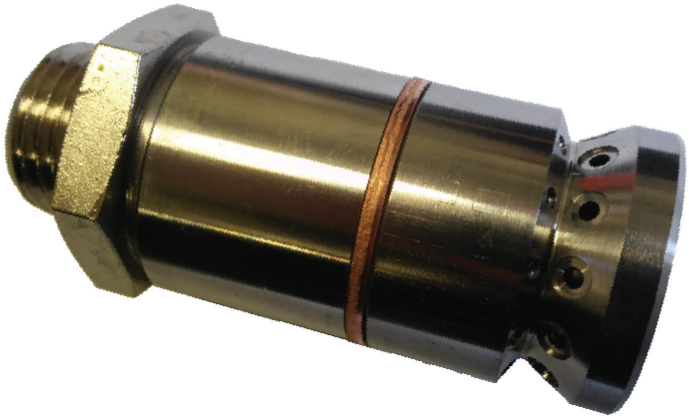

System Type:

ROTOR-Mist

Application:

LOCAL

TECHNICAL PARAMETERS

Total flow surface	:	8,7 mm²
Extinguishing medium	:	Water and gas (RotorMist system)
Filter mesh	:	0,4 x 0,4 mm
Connection type	:	1/2" BSP male
Supply pressure	:	Max 16 bar
Number of pairs of holes	:	6 placed on ½ of the nozzle's surface
Nozzle weight	:	0,2 kg

Design instructions are included in design manual. Our products are being constantly developed and improved, therefore we reserve the right to change technical specifications without prior notice.

TECHNICAL DETAILS

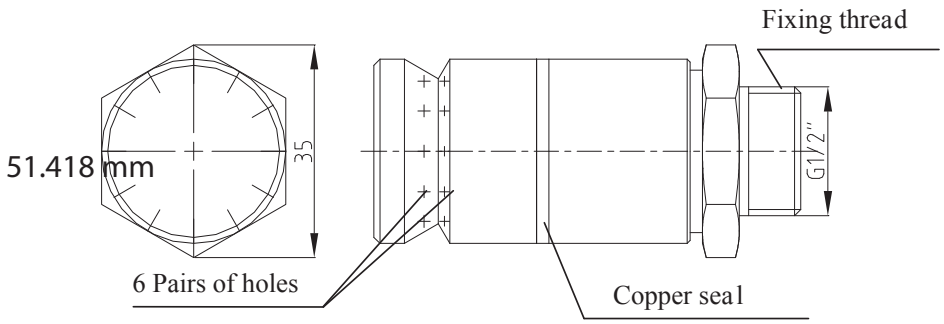

mMist MEDIUM PRESSURE SYSTEM ñ COVERAGE

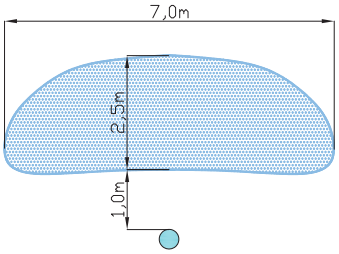

mMist MEDIUM PRESSURE SYSTEM - MIST STREAM PARAMETERS						
Working pressure [bar]	:	4	6		10	15
Dv droplet size [µm]	:			80 - 110		
Average K flow factor	:			4,79		
Extinguishing agent flow rate* [dm³/min]	:	9,8	12,0		15,5	19,0

ROTOR MIST SYSTEM ñ COVERAGE

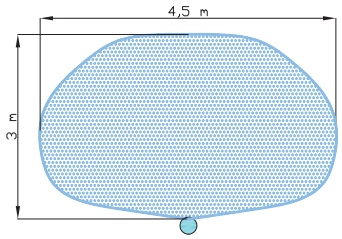

ROTOR MIST SYSTEM - MIST STREAM PARAMETERS*	
Initial pressure [bar]	: 15
Dv droplet size [µm]	: 85-120
Minimal distance from an obstacle [m]	: 0,4
Effective coverage with mist stream [m2]	: 12
Coverage of 1 m² of protected area [dm³/min]	: 0,6

*** May vary ±5%. | For nozzle fixed vertically.**
Our products are being constantly developed and improved, therefore we reserve the right to change technical specifications without prior notice.

CF-NCSSFH 02 NOZZLE
Data Sheet

Full Title: CFNCSSFH 02.S

CFNCSSFH - Colliding nozzle

02 - Model number

S - Stainless steel (304)

System Type:

Application:

TECHNICAL PARAMETERS

Total flow surface	:	4,37 mm²
Extinguishing medium	:	Water
Filter mesh	:	0,4 x 0,4 mm
Connection type	:	1/2" BSP male
Supply pressure	:	Max 16 bar
Number of pairs of holes	:	3 placed on 1/4 of the nozzle's surface
Nozzle weight	:	0,2 kg

Design instructions are included in design manual. Our products are being constantly developed and improved, therefore we reserve the right to change technical specifications without prior notice.

TECHNICAL DETAILS

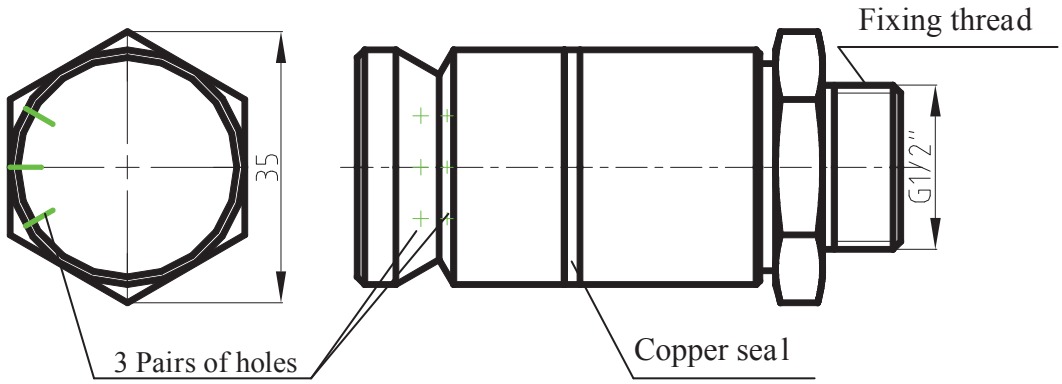

mMist MEDIUM PRESSURE SYSTEM ñ MIST STREAM

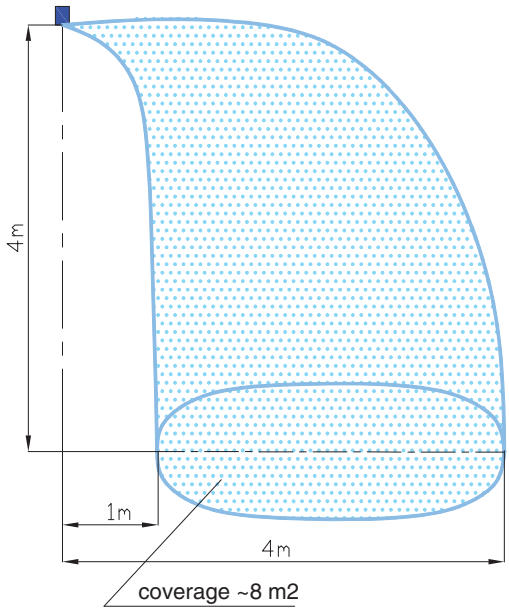

mMist MEDIUM PRESSURE SYSTEM - MIST STREAM PARAMETERS

Working pressure [bar]	:	4	6	10	15
Dv Droplet size [µm]			85 – 120		
Average K flow factor	:		2,45		
Extinguishing agent flow rate* [dm³/min]	:	4,9	6	7,5	9,5
Coverage of 1 m² of protected area* [dm³/min]	:		0,8		

*** May vary ± 5%.**
Our products are being constantly developed and improved, therefore we reserve the right to change technical specifications without prior notice.

CF-NCSSFH 03 NOZZLE
Data Sheet

Full Title: CFNCSSFH 03.S

CFNCSSFH - Colliding nozzle

03 - Model number

S - Stainless steel (304)

System Type:

ROTOR-Mist

Application:

LOCAL

TECHNICAL PARAMETERS

Total flow surface	:	45,31 mm²
Extinguishing medium	:	Water
Filter mesh	:	0,4 x 0,4 mm
Connection type	:	1/2" BSP male
Supply pressure	:	Max 16 bar
Number of pairs of holes	:	12
Nozzle weight	:	0,2 kg

Design instructions are included in design manual. Our products are being constantly developed and improved, therefore we reserve the right to change technical specifications without prior notice.

TECHNICAL DETAILS

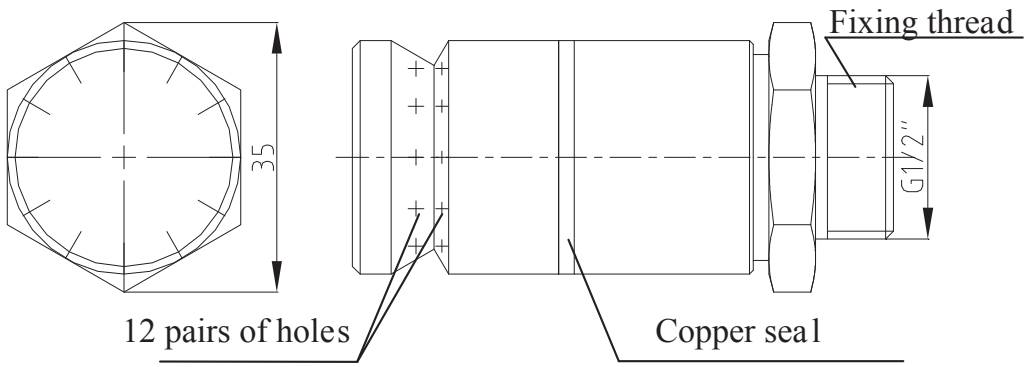

mMist MEDIUM PRESSURE SYSTEM ñ MIST STREAM

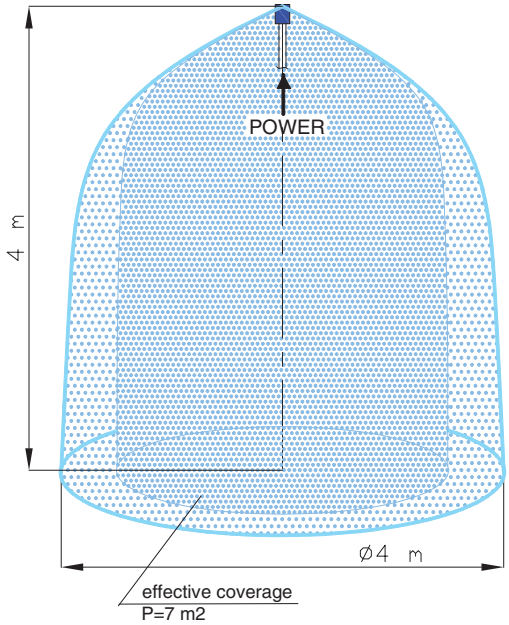

mMist MEDIUM PRESSURE SYSTEM - MIST STREAM PARAMETERS

Working pressure [bar]	:	4	6	10	15
Dv Droplet size [µm]			85 – 120		
Average K flow factor	:		21,0		
Extinguishing agent flow rate* [dm³/min]	:	42,0	51,44	66,41	81,33
Coverage of 1 m² of protected area* [dm³/min]	:		3,9		

*** May vary ± 5%.**
Our products are being constantly developed and improved, therefore we reserve the right to change technical specifications without prior notice.

CF-NCSSFH 31 NOZZLE
Data Sheet

Full Title: CFNCSSFH 31

CFNCSSFH - Colliding nozzle

31 - Model number

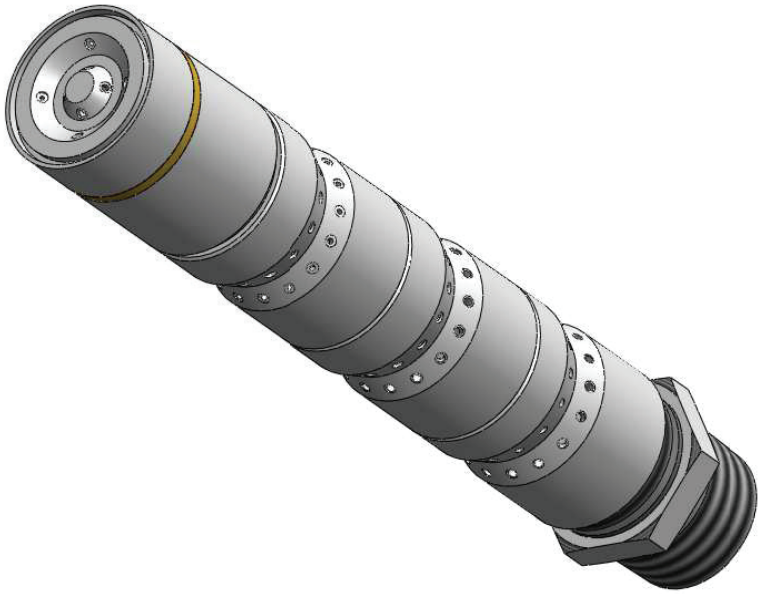

System Type:

m-Mist

TECHNICAL PARAMETERS

Total outflow surface	:	148,8 mm²
Extinguishing medium	:	Water
Filter mesh	:	0,6 x 0,6 mm and 0,4 x 0,4 mm
Connection type	:	¾" BSP male
Supply pressure	:	Max 10 bar
Number of pairs of holes	:	3 X 12 (circular) + 4 (front)
Nozzle weight	:	0,35 kg

Application: Head set dedicated for extinguishing mine corridors (5m width).

TECHNICAL DETAILS

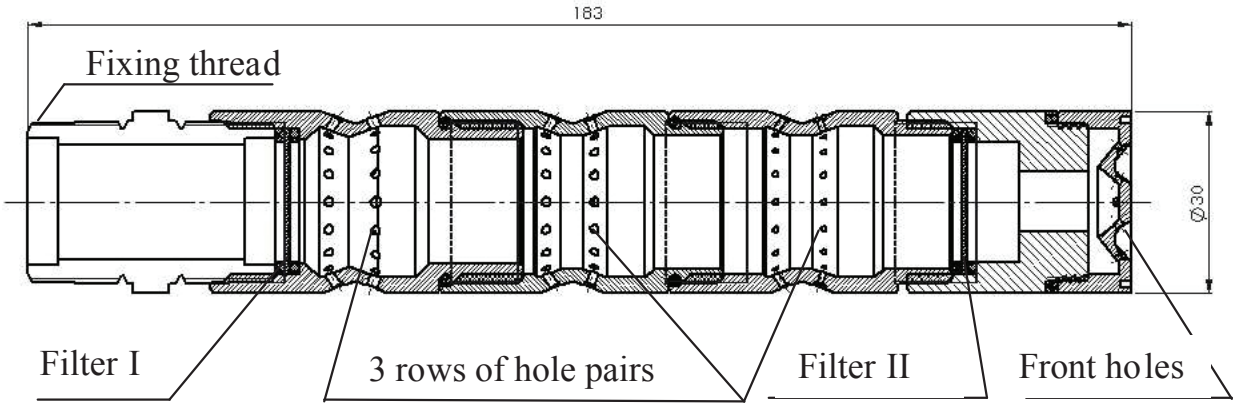

mMist MEDIUM PRESSURE SYSTEM ñ MIST STREAM

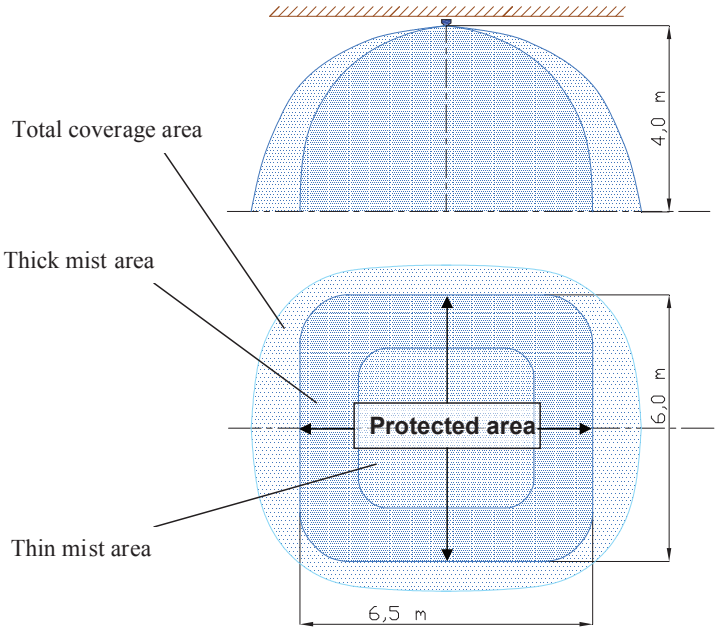

mMist MEDIUM PRESSURE SYSTEM - MIST STREAM PARAMETERS

Working pressure [bar]	:	4	6	8	10
Dv Droplet size [µm]			35 – 250		
Average K flow factor	:		76,0		
Extinguishing agent flow rate* [dm³/min]	:	42,0	186	215	240,5
Coverage of 1 m² of protected area* [dm³/min]	:		2,75		
Protected area [m²]	:		39		

*** May vary ± 5%.**
Our products are being constantly developed and improved, therefore we reserve the right to change technical specifications without prior notice.

CF-NCSSFH 32 NOZZLE
Data Sheet

Full Title: CFNCSSFH 32

CFNCSSFH - Colliding nozzle

32 - Model number

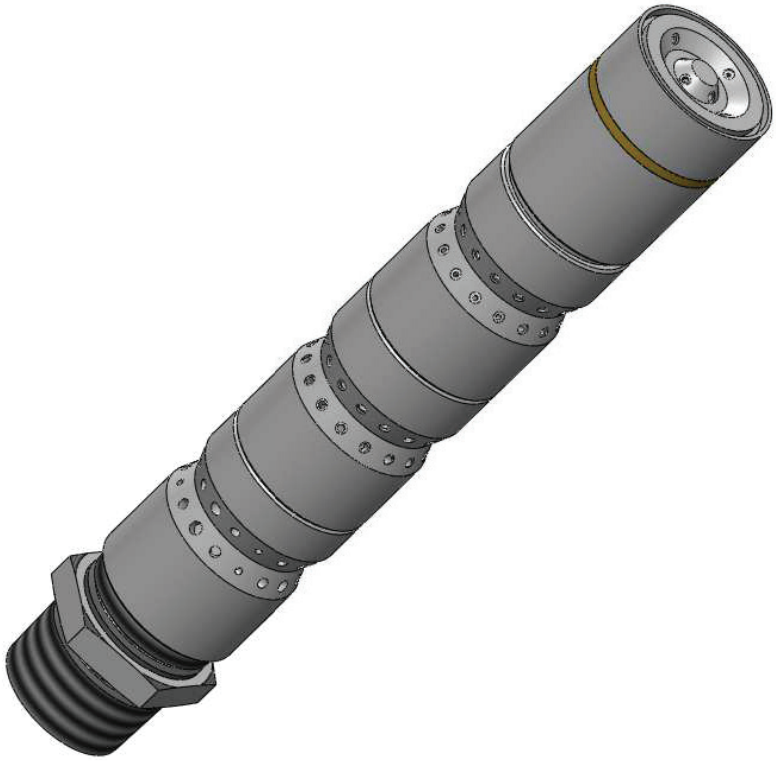

System Type:

m-Mist

TECHNICAL PARAMETERS

Material	:	Stainless steel
Total outflow surface	:	179,5 mm²
Extinguishing medium	:	Water
Filter mesh	:	0,6 x 0,6 mm and 0,4 x 0,4 mm
Connection type	:	¾" BSP male
Supply pressure	:	Max 10 bar
Number of pairs of holes	:	3 X 12 (circular) + 4 (front)
Nozzle weight	:	0,35 kg

Application: Head set dedicated for extinguishing mine corridors (7m width).

TECHNICAL DETAILS

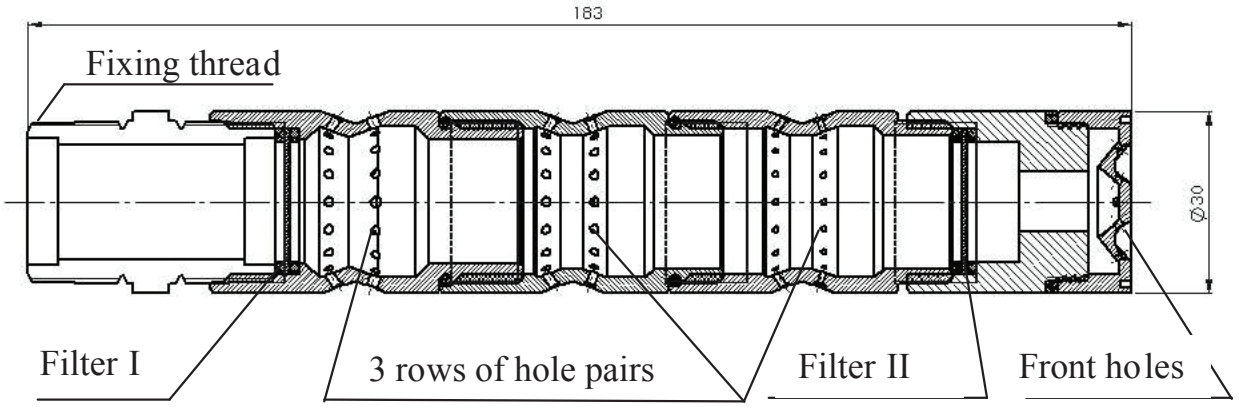

mMist MEDIUM PRESSURE SYSTEM ñ MIST STREAM

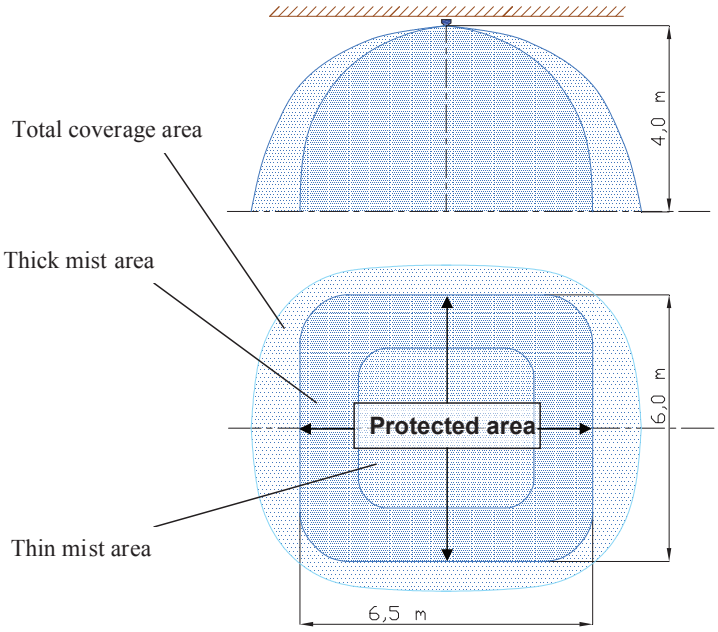

mMist MEDIUM PRESSURE SYSTEM - MIST STREAM PARAMETERS

Working pressure [bar]	:	4	6	8	10
Dv Droplet size [µm]			35 – 250		
Average K flow factor	:		76,0		
Extinguishing agent flow rate* [dm³/min]	:	42,0	186	215	240,5
Coverage of 1 m² of protected area* [dm³/min]	:		2,75		
Protected area [m²]	:		39		

*** May vary ± 5%.**
Our products are being constantly developed and improved, therefore we reserve the right to change technical specifications without prior notice.

CF-NCSSFH 33 NOZZLE
Data Sheet

Full Title: CFNCSSFH 33

CFNCSSFH - Colliding nozzle (Net filter Circle Symmetrical Set Fluid Heads)

33 - Model number

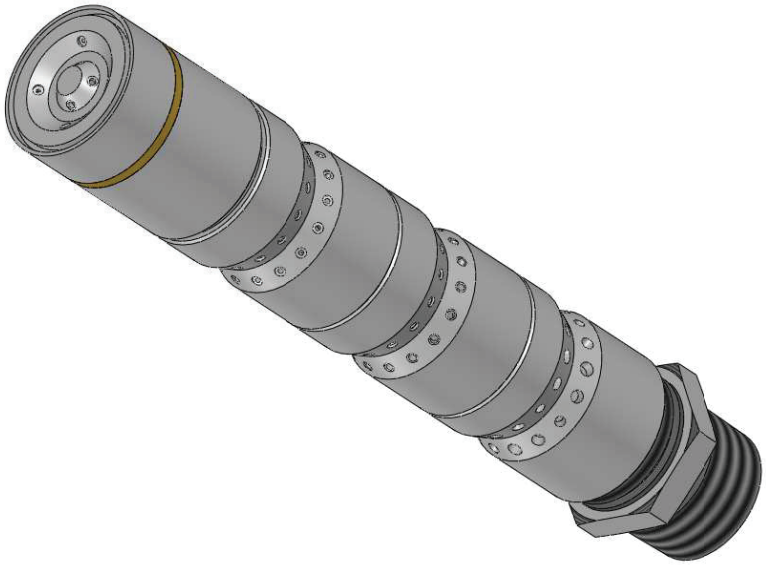

System Type:

m-Mist

TECHNICAL PARAMETERS

Material	:	Stainless steel
Total outflow surface	:	231,35 mm²
Extinguishing medium	:	Water
Filter mesh	:	0,6 x 0,6 mm and 0,4 x 0,4 mm
Connection type	:	¾" BSP male
Supply pressure	:	Max 10 bar
Number of pairs of holes	:	3 X 12 (circular) + 4 (front)
Nozzle weight	:	0,35 kg

Application: Head set dedicated for extinguishing mine corridors (11m width).

TECHNICAL DETAILS

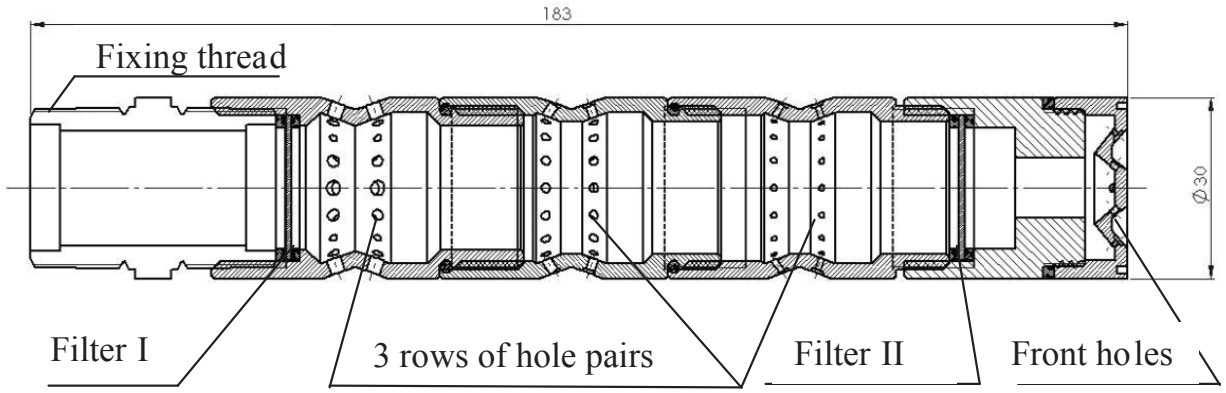

mMist MEDIUM PRESSURE SYSTEM ñ MIST STREAM

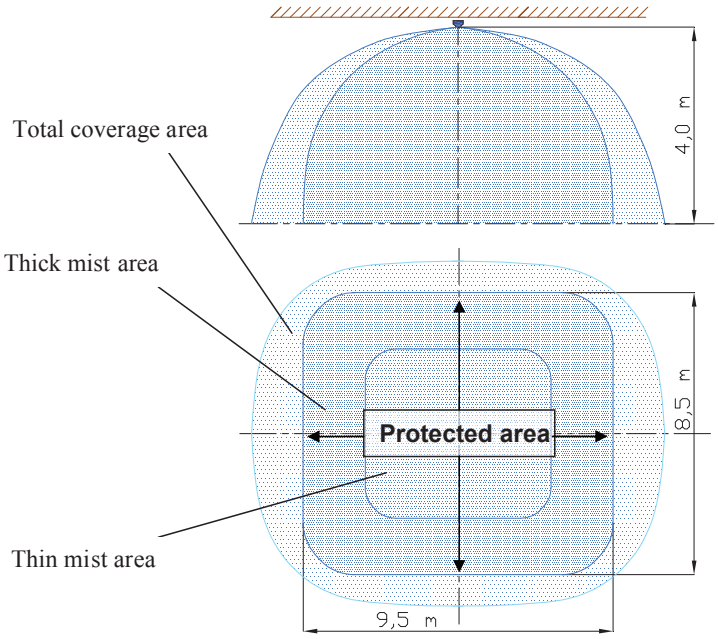

mMist MEDIUM PRESSURE SYSTEM - MIST STREAM PARAMETERS

Working pressure [bar]	:	4	6	8	10
Dv Droplet size [µm]			35 – 250		
Average K flow factor	:		103,3		
Extinguishing agent flow rate* [dm³/min]	:	206,0	252,0	-	-
Coverage of 1 m² of protected area* [dm³/min]	:		2,1		
Protected area [m²]	:		74		

*** May vary ± 5%.**
Our products are being constantly developed and improved, therefore we reserve the right to change technical specifications without prior notice.

CF-NCSSFH 34 NOZZLE
Data Sheet

Full Title: CFNCSSFH 34

CFNCSSFH - Colliding heads set

34 - Model number

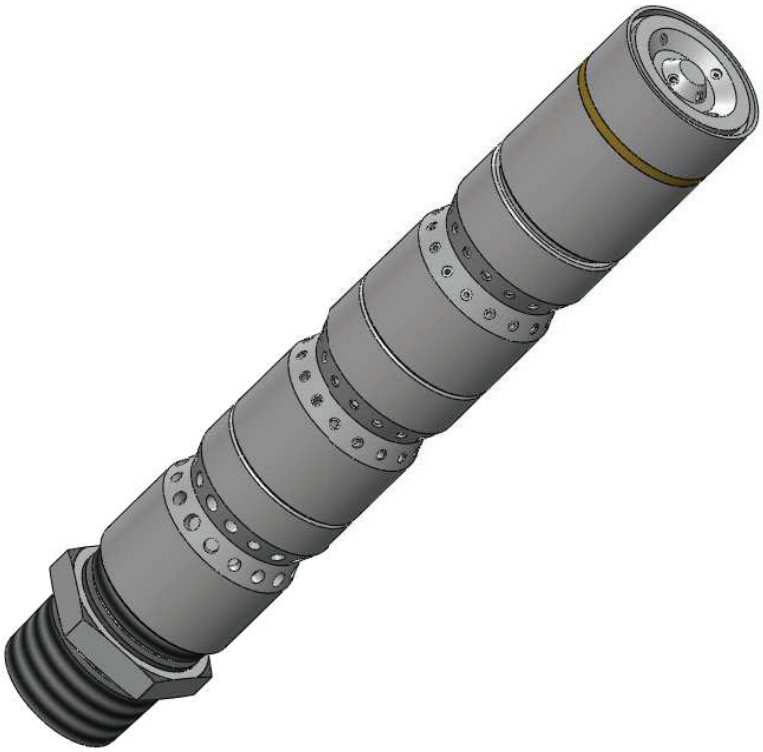

System Type:

m-Mist

TECHNICAL PARAMETERS

Material	:	Stainless steel
Total outflow surface	:	272,33 mm²
Extinguishing medium	:	Water
Filter mesh	:	0,6 x 0,6 mm and 0,4 x 0,4 mm
Connection type	:	¾" BSP male
Supply pressure	:	Max 10 bar
Number of pairs of holes	:	3 X 12 (circular) + 4 (front)
Nozzle weight	:	0,35 kg

Application: Head set dedicated for extinguishing mine corridors (11m width).

TECHNICAL DETAILS

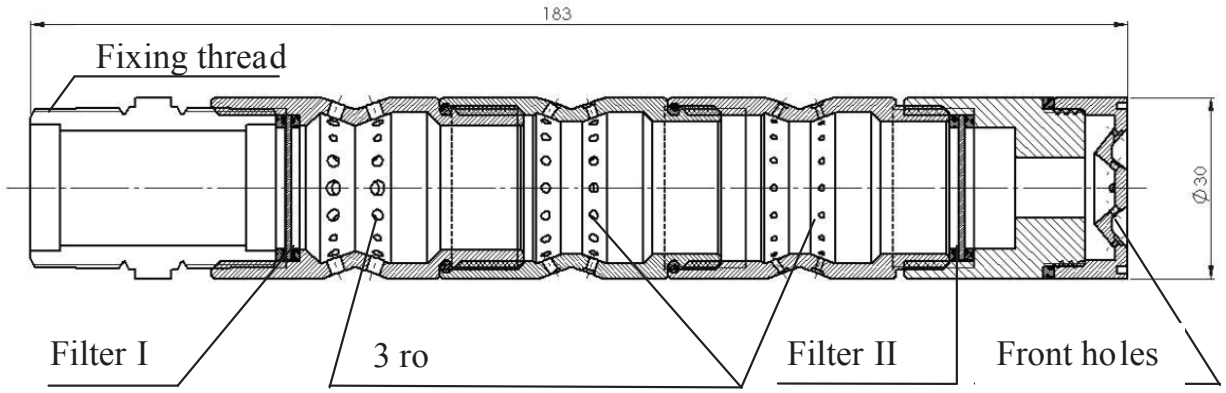

mMist MEDIUM PRESSURE SYSTEM ñ MIST STREAM

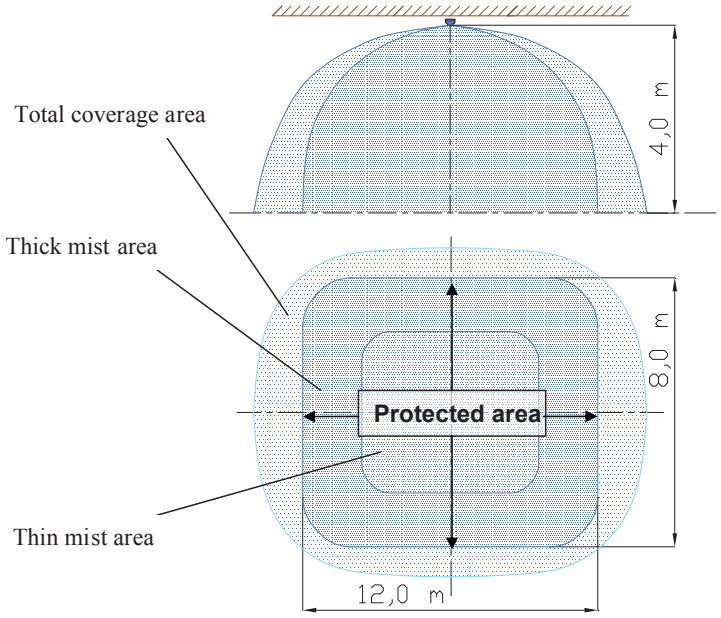

mMist MEDIUM PRESSURE SYSTEM - MIST STREAM PARAMETERS

Working pressure [bar]	:	4	6	8	10
Dv Droplet size [µm]			35 – 250		
Average K flow factor	:		121,75		
Extinguishing agent flow rate* [dm³/min]	:	243,5	298,0	-	-
Coverage of 1 m² of protected area* [dm³/min]	:		1,95		
Protected area [m²]	:		88		

*** May vary ± 5%.**
Our products are being constantly developed and improved, therefore we reserve the right to change technical specifications without prior notice.

CF-NGWP 1 NOZZLE
Data Sheet

Full description: CFNGWP 1.X.Y

CFNGWP - (N) net filter, (G) head, (WP) multi pairs
1 - Model number
X - Kind of material
1 stainless steel (316)
2 stainless steel (304)
3 brass (C37800)
4 brass (CuZn36Pb2As)

Y - 0 without cap
1 silicon protection cap

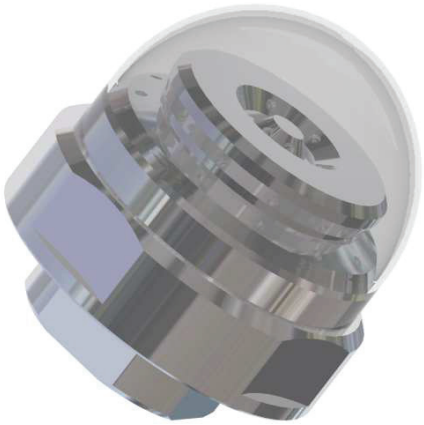

CFNGWP 1.1.1

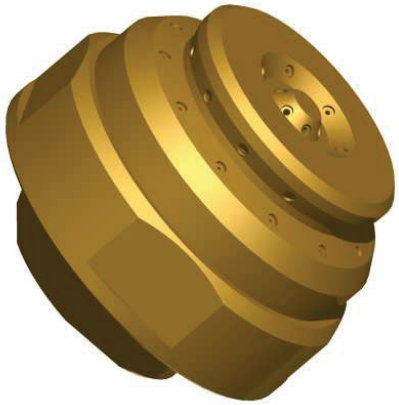

CFNGWP 1.3.0

System Type:

Application:

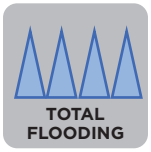

TECHNICAL PARAMETERS

Total flow surface	:	26,1 mm²
Basic extinguishing media	:	Water
Net filter opening	:	0,4 x 0,4 mm
Connection size	:	¾" BSP int
Inlet pressure	:	6 - 16 bar
Number of holes ring	:	2
Head weight	:	0,5 kg
Protection cap	:	Cat. No. - N 117

Design instructions are included in design manual. Our products are being constantly developed and improved, therefore we reserve the right to change technical specifications without prior notice.

TECHNICAL DETAILS

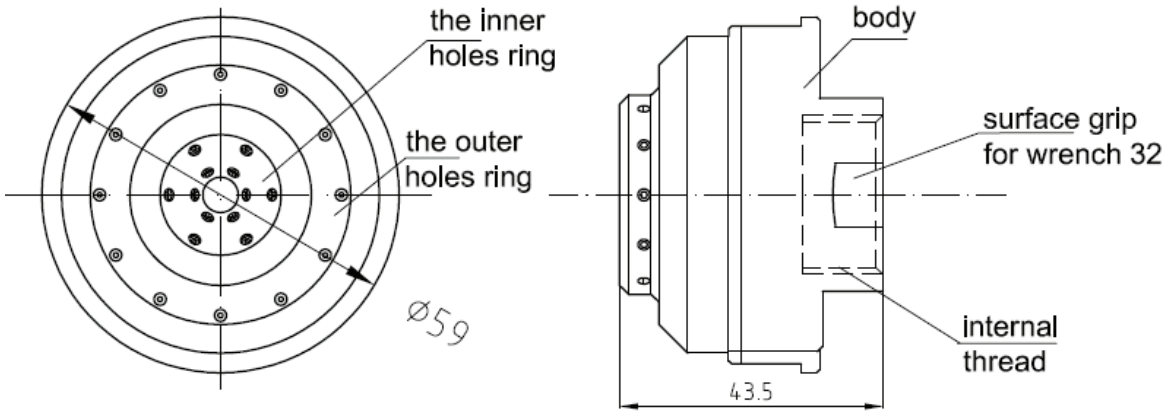

MIST STREAM

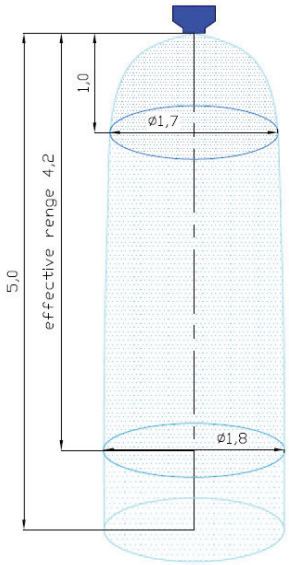

MIST STREAM PARAMETERS

Working pressure [bar]	:	6	8	12	16
Droplet size Dv [µm]	:	50 – 130			
K outflow factor	:	14,8			
Extinguishing agent expenditure [lit/min]	:	36,2	42,0	51,5	59,5
Effective stream range * [m]	:	1,8	2,2	3,0	3,6

***Range of horizontal stream.**
Our products are being constantly developed and improved, therefore we reserve the right to change technical specifications without prior notice.

CF-NGWP 9 NOZZLE
Data Sheet

Full description: CFNGWP 9.X.Y

CFNGWP - (N) net filter, (G) head, (WP) multi pairs
9 - Model number
X - Kind of material
1 stainless steel (316)
2 stainless steel (304)
3 brass (C37800)
4 brass (CuZn36Pb2As)

Y - 0 without cap
1 silicon protection cap

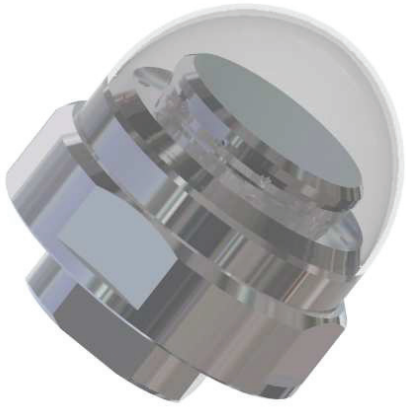

CFNGWP 9.1.1

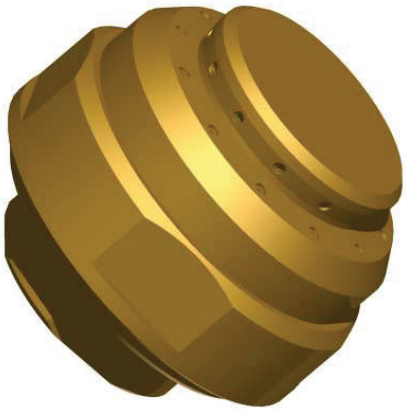

CFNGWP 9.3.0

System Type:

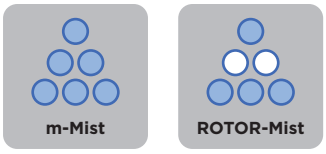

Application:

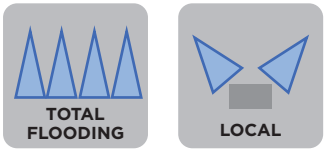

TECHNICAL PARAMETERS

Total flow surface	:	17,0 mm²
Basic extinguishing media	:	Water, gas and water
Net filter opening	:	0,4 x 0,4 mm
Connection size	:	¾" BSP int
Inlet pressure	:	6 - 16 bar
Number of holes ring	:	1
Head weight	:	0,5 kg
Protection cap	:	Cat. No. - N 117

Design instructions are included in design manual. Our products are being constantly developed and improved, therefore we reserve the right to change technical specifications without prior notice.

TECHNICAL DETAILS

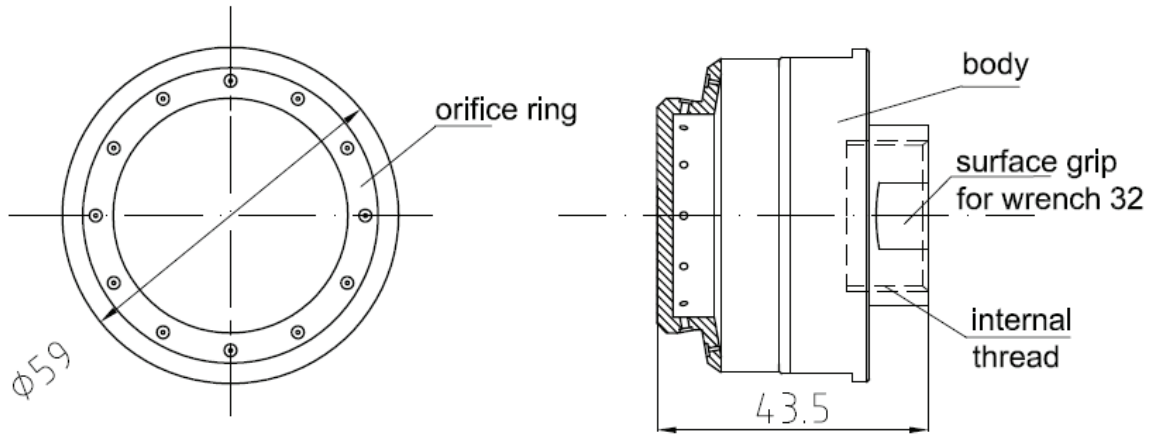

MEDIUM PRESSURE SYSTEM - MIST STREAM

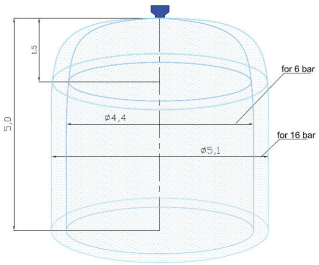

MEDIUM PRESSURE SYSTEM - MIST STREAM PARAMETERS						
Working pressure [bar]	:	6	8		12	16
Droplet size Dv [µm]	:			50 – 130		
K flow factor	:			9,5		
Extinguishing agent expenditure [lit/min]	:	23,0	27,0		33,0	38,0
Effective stream range * [m]	:	0,3	0,55	0,75	0,9	

ROTOR MIST SYSTEM - MIST STREAM

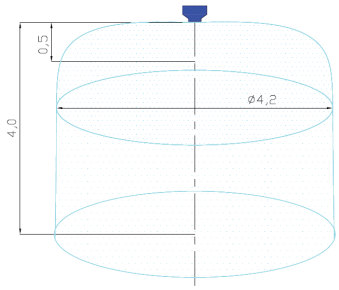

ROTOR MIST SYSTEM - MIST STREAM PARAMETERS	
Initial pressure of work [bar]	: 15
Droplet size Dv [µm]	: 50-100
Extinguishing agent expenditure** [lit/30 s]	: 14,0
The minimum distance required to develop a stream of Watermist [m]	: 0,3
Effective stream range *** [m]	: 0,5

***Range of horizontal stream. | **The value of information only. | ***Measurement in 30 seconds of action.**
Our products are being constantly developed and improved, therefore we reserve the right to change technical specifications without prior notice.

CF-NGWP 11NOZZLE
Data Sheet

Full description: CFNGWP 11.X.Y

CFNGWP - (N) net filter, (G) head, (WP) multi pairs
11 - Model number
X - Kind of material
1 stainless steel (316)
2 stainless steel (304)
3 brass (C37800)
4 brass (CuZn36Pb2As)

Y - 0 without cap
1 silicon protection cap

System Type:

Application:

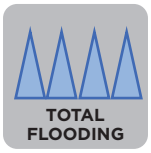

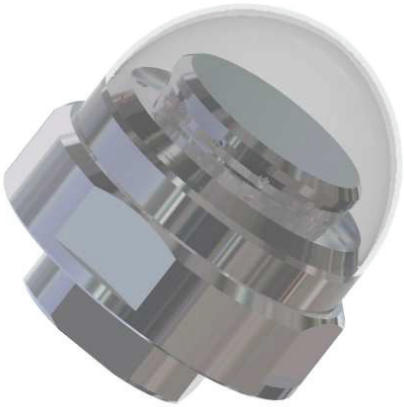

CFNGWP 11.1.1

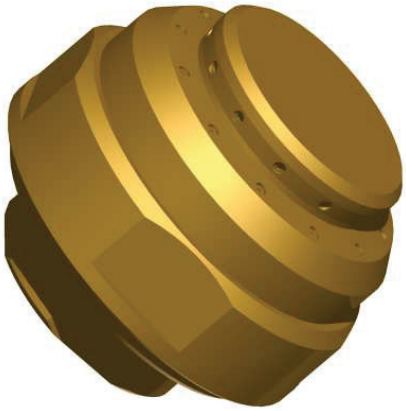

CFNGWP 11.3.0

TECHNICAL PARAMETERS

Basic extinguishing media	:	Water
Net filter opening	:	0,4 x 0,4 mm
Droplet size Dv	:	50 – 130 µm
Connection size	:	¾" BSP int
Inlet pressure	:	6 - 16 bar
K outflow factor	:	12,7
Number of holes ring	:	1
Head weight	:	0,5 kg
Protection cap	:	Cat. No. - N 117

Design instructions are included in design manual. Our products are being constantly developed and improved, therefore we reserve the right to change technical specifications without prior notice.

TECHNICAL DETAILS

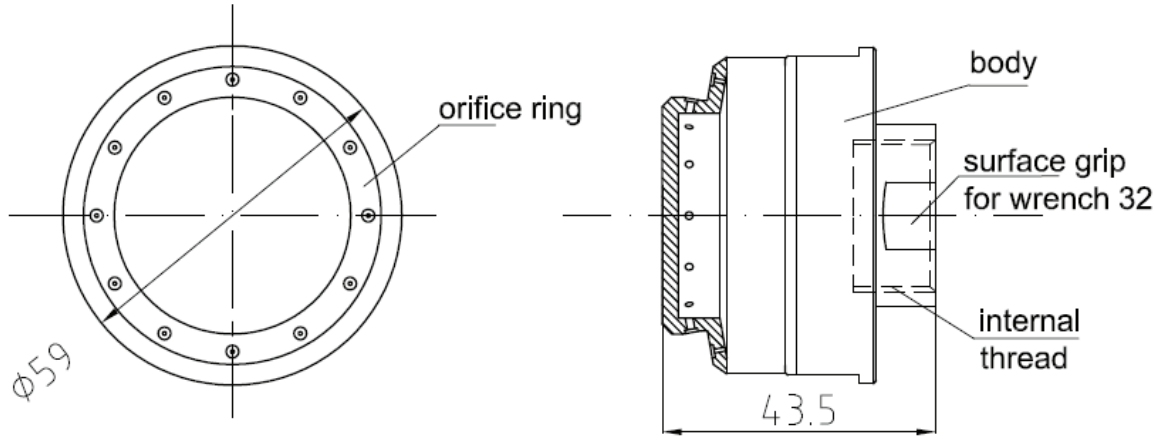

MEDIUM PRESSURE SYSTEM - MIST STREAM

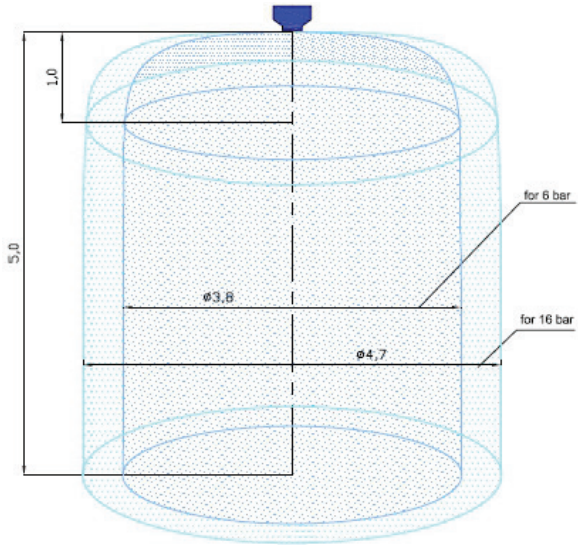

MIST STREAM PARAMETERS

Working pressure [bar]	:	6	8	12	16
K outflow factor	:		12,7		
Extinguishing agent expenditure [lit/min]	:	30,5	36,0	44,0	51,5
Effective stream range * [m]	:	0,4	0,75	0,9	1,0

***Range of horizontal stream.**
Our products are being constantly developed and improved, therefore we reserve the right to change technical specifications without prior notice.

CF-NGWP 14NOZZLE
Data Sheet

Full description: CFNGWP 14.X.Y

CFNGWP - (N) net filter, (G) head, (WP) multi pairs
14 - Model number
X - Kind of material
1 stainless steel (316)
2 stainless steel (304)
3 brass (C37800)
4 brass (CuZn36Pb2As)

Y - 0 without cap
1 silicon protection cap

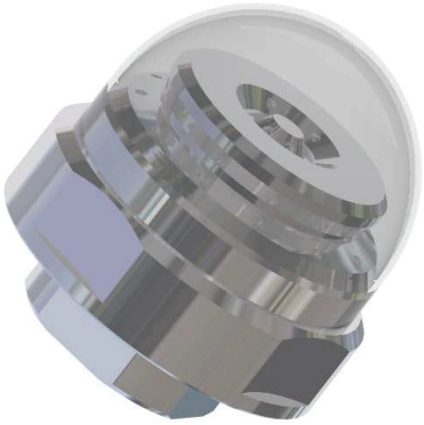

CFNGWP 14.1.1

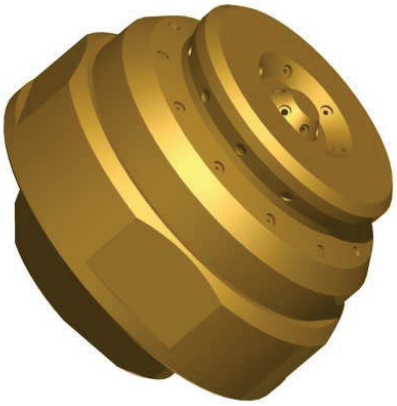

CFNGWP 14.3.0

System Type:

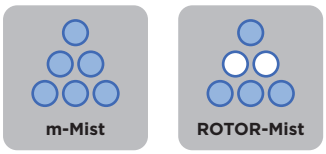

Application:

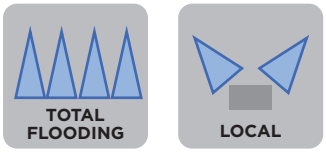

TECHNICAL PARAMETERS

Total flow surface	:	25,65 mm²
Basic extinguishing media	:	Water, gas and water
Net filter opening	:	0,4 x 0,4 mm
Connection size	:	¾" BSP int
Inlet pressure	:	6 - 16 bar
Number of holes ring	:	2
Head weight	:	0,5 kg
Protection cap	:	Cat. No. - N 117

Design instructions are included in design manual. Our products are being constantly developed and improved, therefore we reserve the right to change technical specifications without prior notice.

TECHNICAL DETAILS

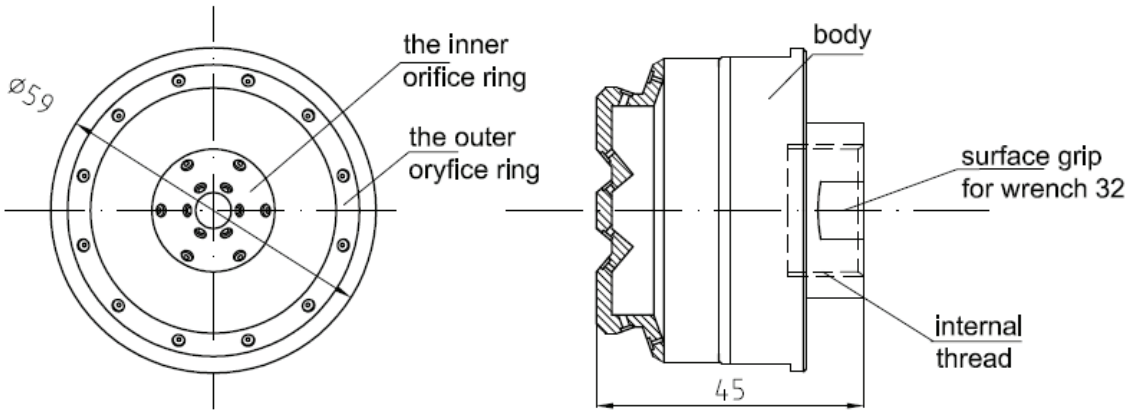

MIST STREAM

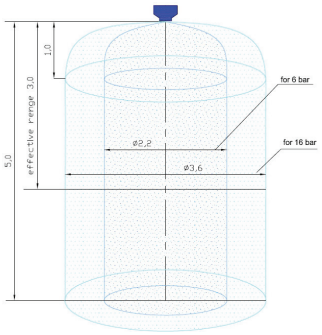

MEDIUM PRESSURE SYSTEM - MIST STREAM PARAMETERS						
Working pressure [bar]	:	6	8		12	16
Droplet size Dv [µm]	:		50 – 130			
K flow factor	:		14,7			
Extinguishing agent expenditure [lit/min]	:	36,0	41,5		51,0	59,0
Effective stream range * [m]	:	2,2 3,0		3,2	3,4	

ROTOR MIST SYSTEM - MIST STREAM

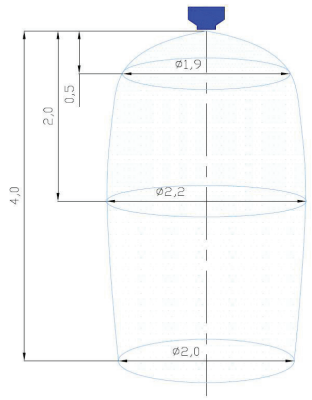

ROTOR MIST SYSTEM - MIST STREAM PARAMETERS	
Initial pressure of work [bar]	: 15
Extinguishing agent expenditure** [lit/30 s]	: 25,1
The minimum distance required to develop a stream of Watermist [m]	: 0,5
Effective stream range *** [m]	: 3,3
Droplet size Dv [µm]	: 50-110

***Range of horizontal stream. | **The value of information only. | ***Measurement in 30 seconds of action.**
Our products are being constantly developed and improved, therefore we reserve the right to change technical specifications without prior notice.

CF-NGWP 15 NOZZLE
Data Sheet

Full description: CFNGWP 15.X.Y

CFNGWP - (N) net filter, (G) head, (WP) multi pairs
15 - Model number
X - Kind of material
1 stainless steel (316)
2 stainless steel (304)
3 brass (C37800)
4 brass (CuZn36Pb2As)

Y - 0 without cap
1 silicon protection cap

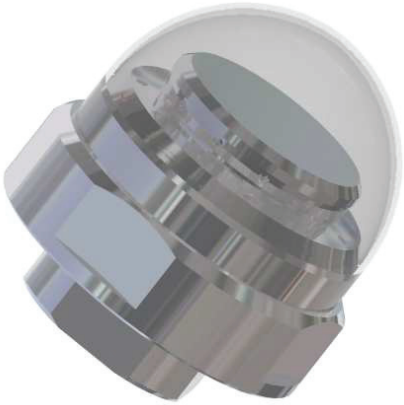

CFNGWP 15.1.1

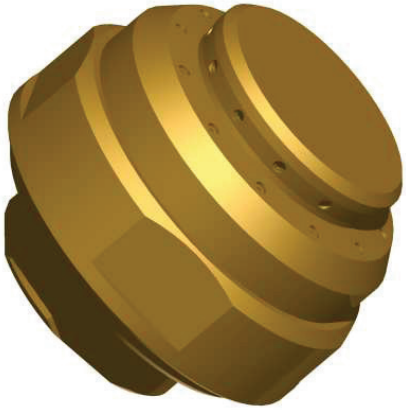

CFNGWP 15.3.0

System Type:

Application:

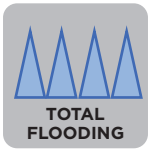

TECHNICAL PARAMETERS

Basic extinguishing media	:	Water
Net filter opening	:	0,4 x 0,4 mm
Droplet size Dv	:	70 – 130 µm
Connection size	:	¾" BSP int
Inlet pressure	:	6 - 16 bar
K outflow factor	:	6,6
Number of holes ring	:	1
Head weight	:	0,5 kg
Protection cap	:	Cat. No. - N 117

Design instructions are included in design manual. Our products are being constantly developed and improved, therefore we reserve the right to change technical specifications without prior notice.

TECHNICAL DETAILS

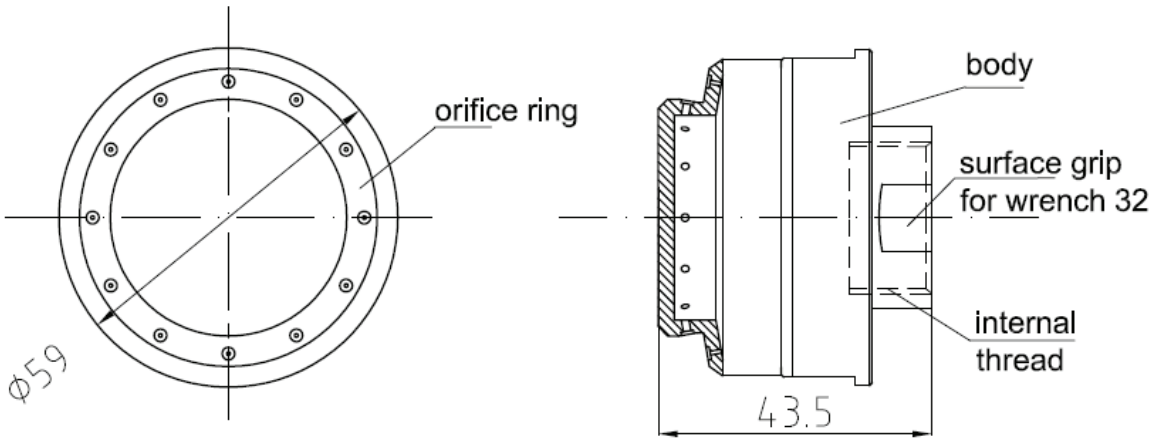

MIST STREAM

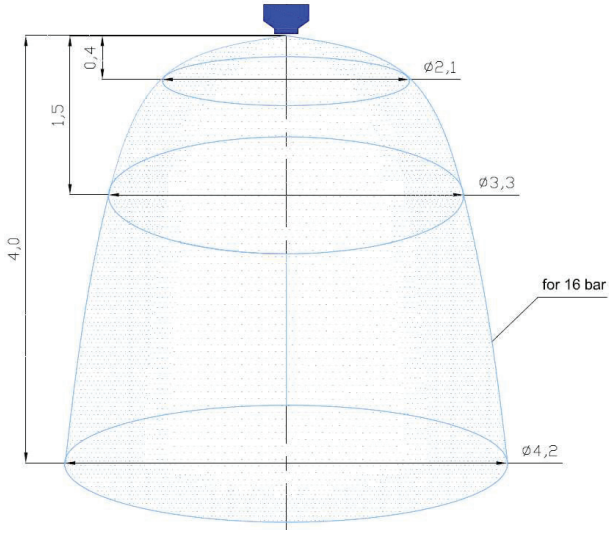

MIST STREAM PARAMETERS

Working pressure [bar]	:	6	8	12	16
K outflow factor	:		6,6		
Extinguishing agent expenditure [lit/min]	:	16,1	18,7	23,0	26,7
Effective stream range * [m]	:	0,3	0,35	0,5	0,6

***Range of horizontal stream.**
Our products are being constantly developed and improved, therefore we reserve the right to change technical specifications without prior notice.

CF-NGWP 32 NOZZLE
Data Sheet

Full description: CFNGWP 32.X.Y

CFNGWP - (N) net filter, (G) head, (WP) multi pairs
32 - Model number
X - Kind of material
1 stainless steel (316)
2 stainless steel (304)
3 brass (C37800)
4 brass (CuZn36Pb2As)

Y - 0 without cap
1 silicon protection cap

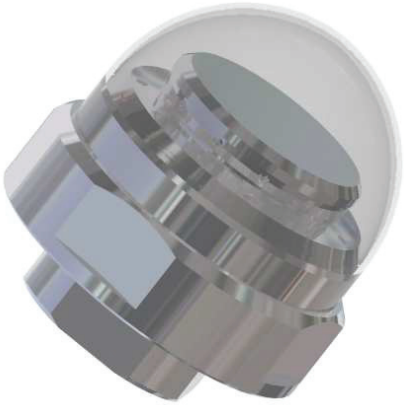

CFNGWP 32.1.1

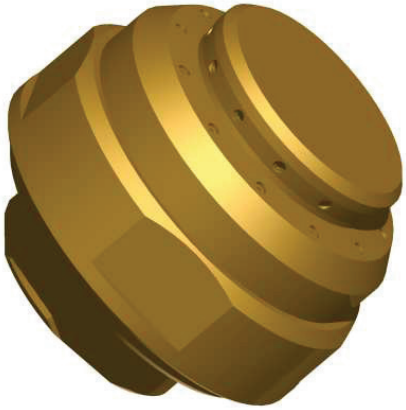

CFNGWP 32.3.0

System Type:

Application:

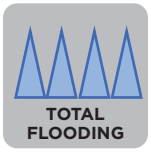

TECHNICAL PARAMETERS

Total flow surface	:	24,5 mm²
Basic extinguishing media	:	Water
Filter mesh	:	0,4 x 0,4 mm
Connection size	:	¾" BSP female
Inlet pressure	:	6 - 16 bar
Weight	:	0,4 kg
Protection cap	:	Cat. No. - N 117

Design instructions are included in design manual. Our products are being constantly developed and improved, therefore we reserve the right to change technical specifications without prior notice.

TECHNICAL DETAILS

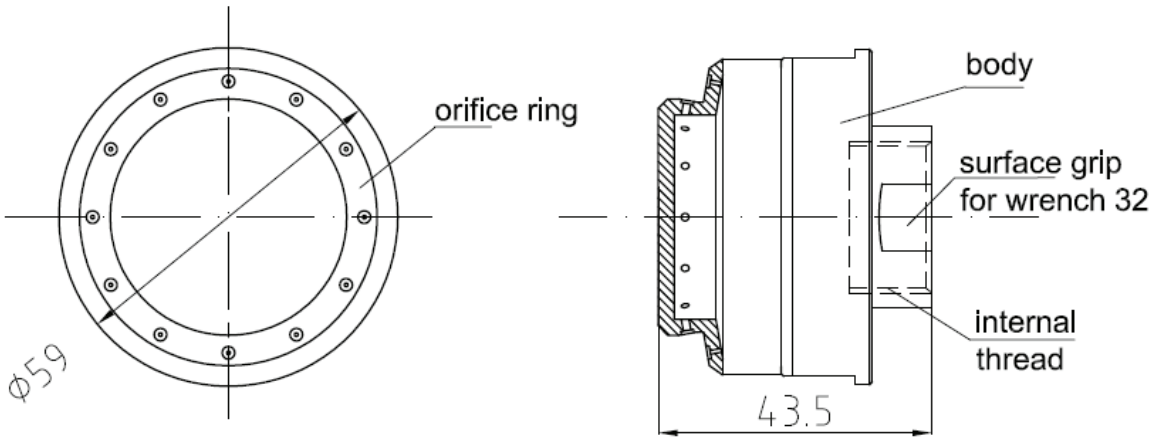

MIST STREAM

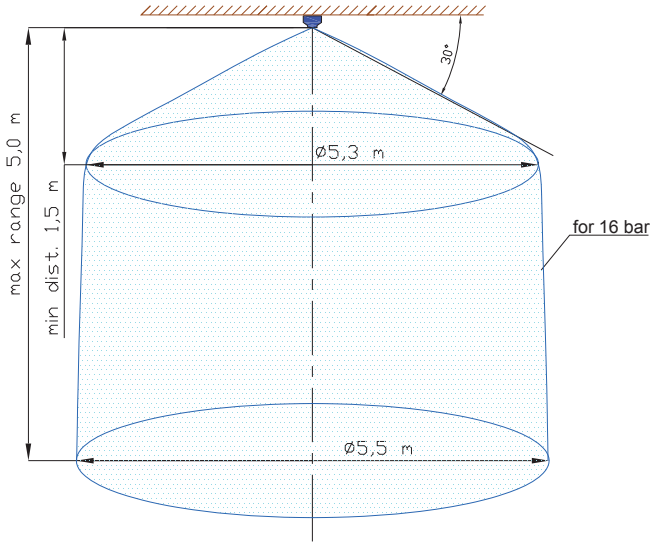

MIST STREAM PARAMETERS

Working pressure [bar]	:	6	8	12	16
Droplet size Dv [µm]	:	90	80	70	65
Average K outflow factor	:		13,4		
Extinguishing agent flow rate* [lit/min]	:	32,8	37,9	46,4	53,6

***May vary ± 5%**.
Our products are being constantly developed and improved, therefore we reserve the right to change technical specifications without prior notice.

CF-NGWP 34 NOZZLE
Data Sheet

Full description: CFNGWP 34.X.Y

CFNGWP - (N) net filter, (G) head, (WP) multi pairs
34 - Model number
X - Kind of material
1 stainless steel (316)
2 stainless steel (304)
3 brass (C37800)
4 brass (CuZn36Pb2As)

Y - 0 without cap
1 silicon protection cap

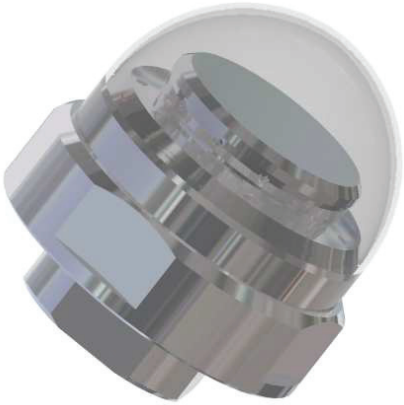

CFNGWP 34.1.1

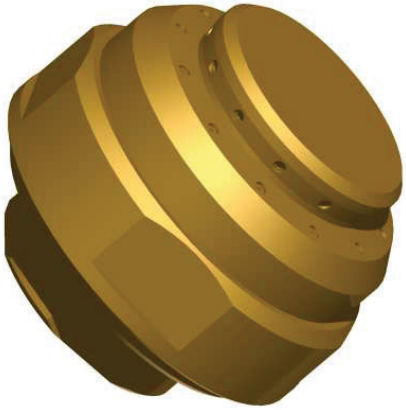

CFNGWP 34.3.0

System Type:

Application:

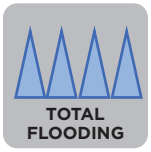

TECHNICAL PARAMETERS

Total flow surface	:	28,8 mm²
Basic extinguishing media	:	Water
Filter mesh	:	0,4 x 0,4 mm
Connection size	:	¾" BSP female
Inlet pressure	:	4-16 bar
Weight	:	0,4 kg
Protection cap	:	Cat. No. - N 117

TECHNICAL DETAILS

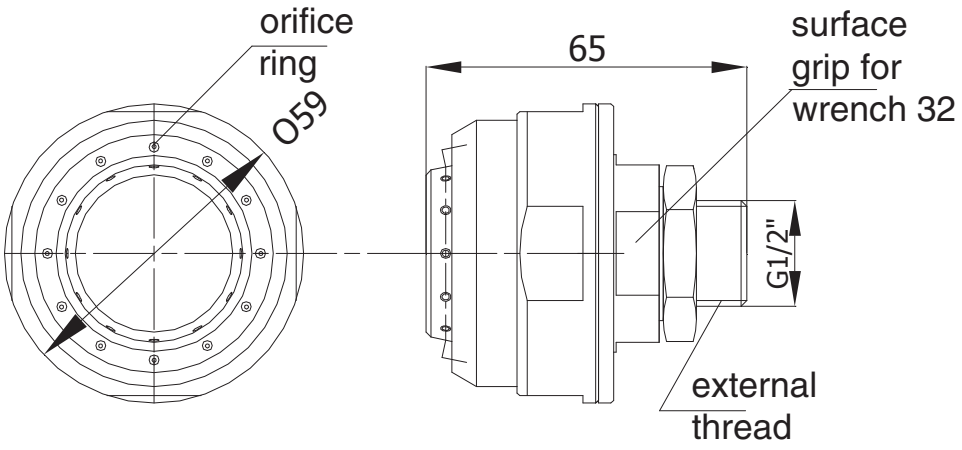

mMIST STREAM

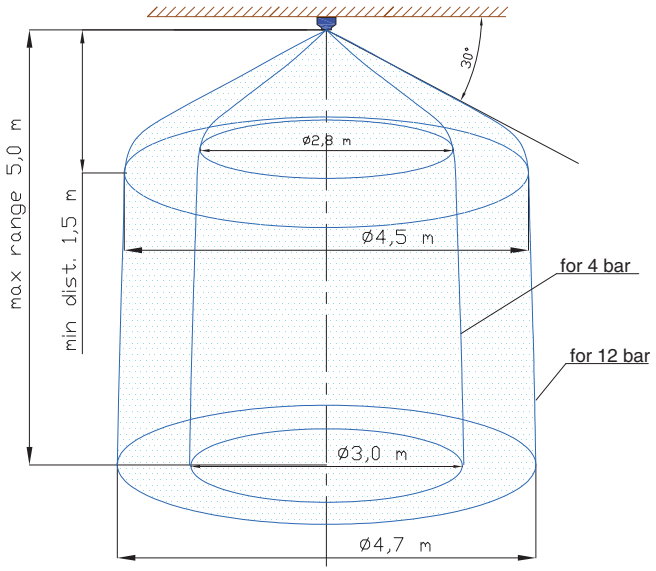

MIST STREAM PARAMETERS

Working pressure [bar]	:	4	6	8	12
Droplet size Dv [µm]	:	80	75	70	65
Average K outflow factor	:		15,0		
Extinguishing agent flow rate* [lit/min]	:	30,0	36,5	42,5	52,0

***May vary ± 5%.**
Our products are being constantly developed and improved, therefore we reserve the right to change technical specifications without prior notice.

CF-NGWP 35 NOZZLE
Data Sheet

Full description: CFNGWP 35.X.Y

CFNGWP - (N) net filter, (G) head, (WP) multi pairs
35 - Model number
X - Kind of material
1 stainless steel (316)
2 stainless steel (304)
3 brass (C37800)
4 brass (CuZn36Pb2As)

Y - 0 without cap
1 silicon protection cap

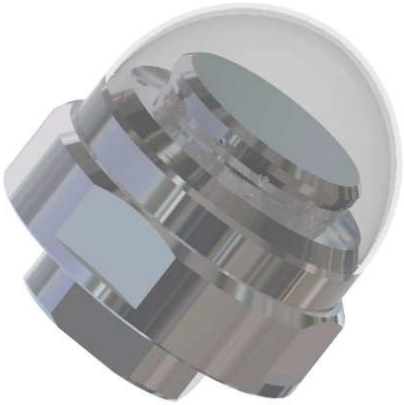

CFNGWP 35.1.1

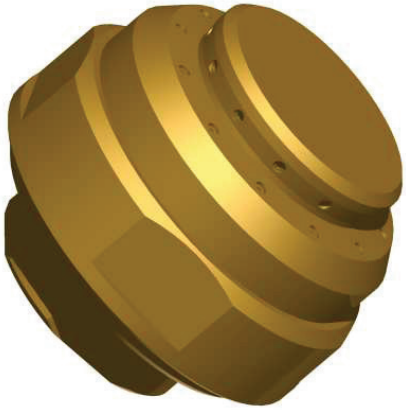

CFNGWP 35.3.0

System Type:

Application:

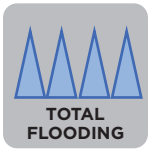

TECHNICAL PARAMETERS

Total flow surface	:	22,6 mm²
Basic extinguishing media	:	Water
Filter mesh	:	0,4 x 0,4 mm
Connection size	:	¾" BSP female
Inlet pressure	:	4-16 bar
Weight	:	0,5 kg
Protection cap	:	Cat. No. - N 117

TECHNICAL DETAILS

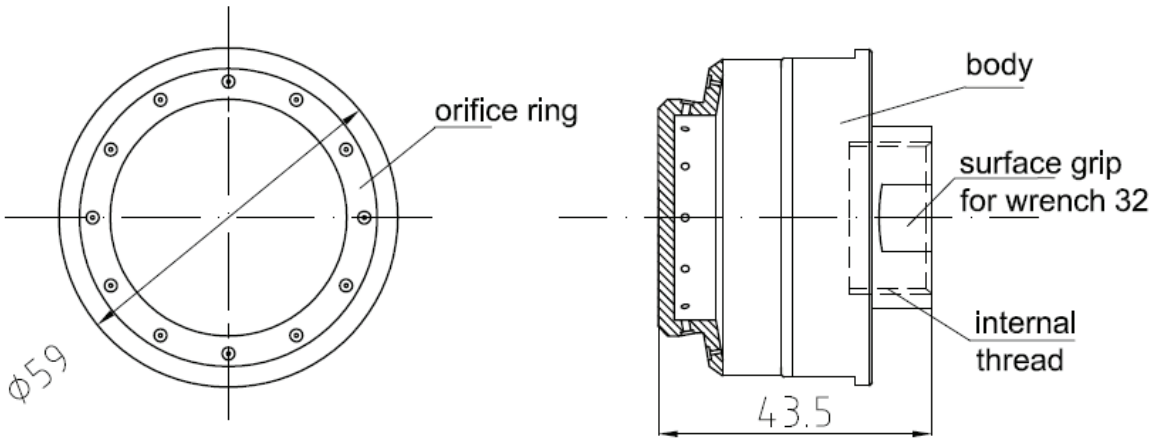

mMIST STREAM

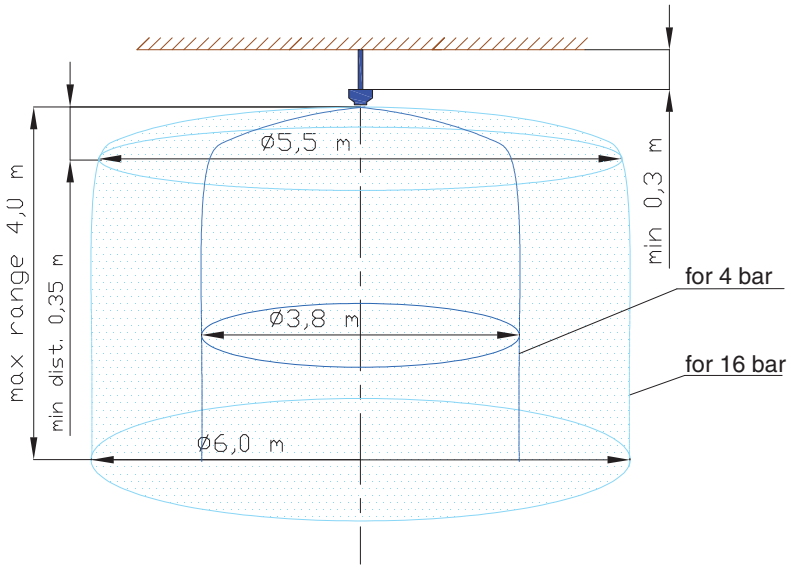

MIST STREAM PARAMETERS

Working pressure [bar]	:	4	8	12	15
Droplet size Dv [µm]	:	105	95	90	80
Average K outflow factor	:		12,0		
Extinguishing agent flow rate* [lit/min]	:	24	34	41,5	46,5

***May vary ± 5%.**
Our products are being constantly developed and improved, therefore we reserve the right to change technical specifications without prior notice.

CF-NGWP 36 NOZZLE
Data Sheet

Full description: CFNGWP 36.X.Y

CFNGWP - (N) net filter, (G) head, (WP) multi pairs
36 - Model number
X - Kind of material
1 stainless steel (316)
2 stainless steel (304)
3 brass (C37800)
4 brass (CuZn36Pb2As)

Y - 0 without cap
1 silicon protection cap

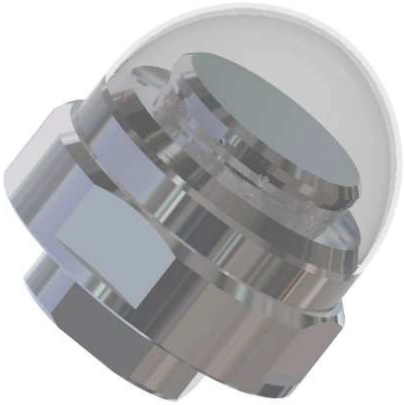

CFNGWP 36.1.1

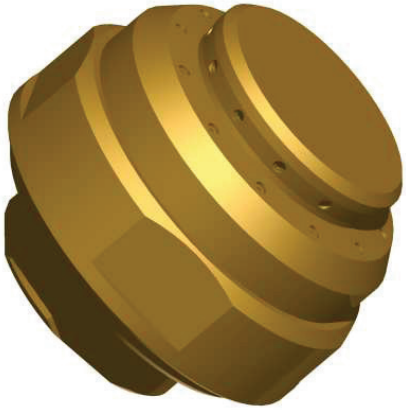

CFNGWP 36.3.0

System Type:

Application:

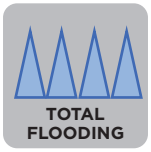

TECHNICAL PARAMETERS

Total flow surface	:	28,8 mm²
Basic extinguishing media	:	Water
Filter mesh	:	0,4 x 0,4 mm
Connection size	:	¾" BSP female
Inlet pressure	:	4-16 bar
Weight	:	0,4 kg
Protection cap	:	Cat. No. - N 117

TECHNICAL DETAILS

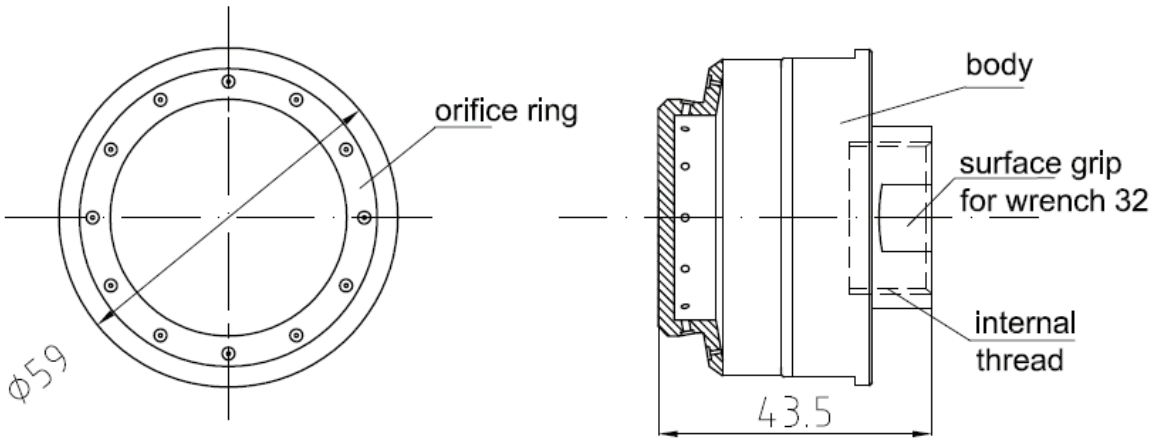

MIST STREAM

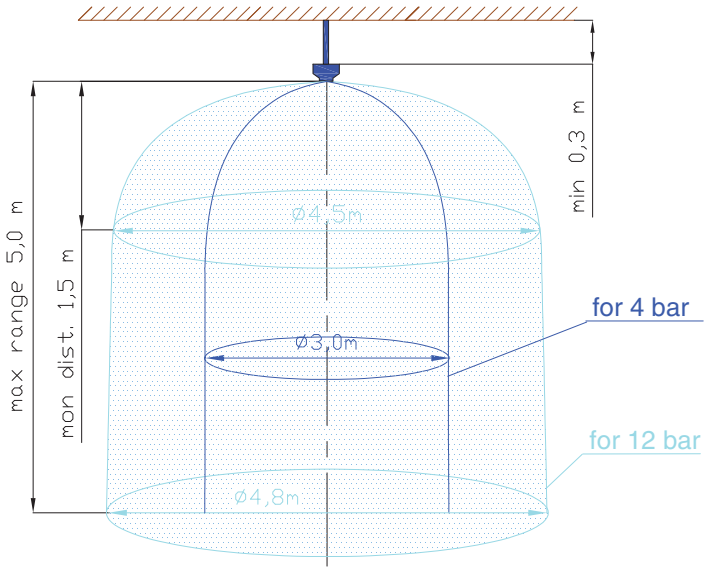

MIST STREAM PARAMETERS

Working pressure [bar]	:	4	6	8	12
Droplet size Dv [µm]	:	125	110	105	95
Average K outflow factor	:		15,0		
Extinguishing agent flow rate* [lit/min]	:	30,0	36,5	42,5	52,0

***May vary ± 5%.**
Our products are being constantly developed and improved, therefore we reserve the right to change technical specifications without prior notice.

CF-NGWP 49 NOZZLE
Data Sheet

Full description: CFNGWP 49.Y

CFNGWP - (N) net filter, (G) head, (WP) multi pairs
49 - Model number
Y - 0 without cap
1 silicon protection cap

CFNGWP 49.0

System Type:

Application:

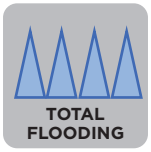

TECHNICAL PARAMETERS

Material	:	Stainless steel (316)
Total flow surface	:	60,5 mm²
Basic extinguishing media	:	Water
Filter mesh	:	0,4 x 0,4 mm
Connection type	:	3/4” BSP male
Inlet pressure	:	2 - 6 bar
Nozzle weight	:	0,35 kg
Protection cap	:	cat. no. – NA 004

TECHNICAL DETAILS

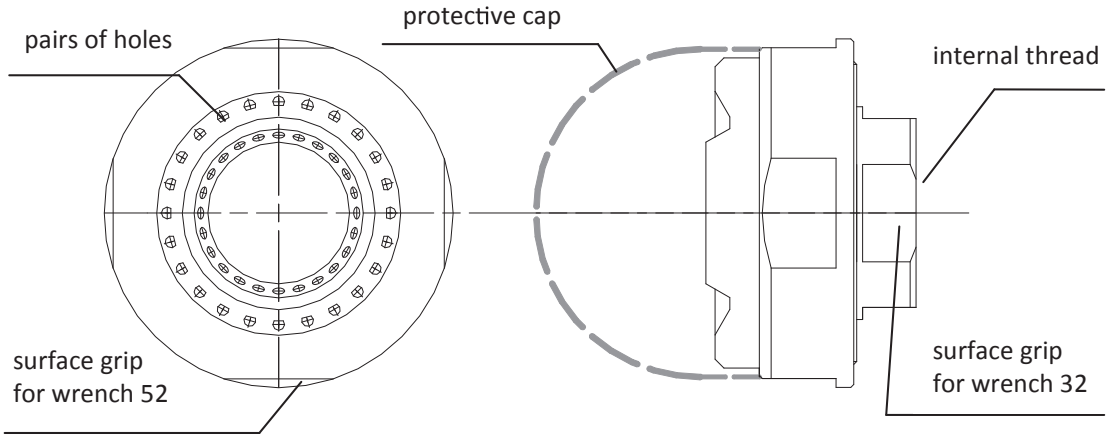

mMist MEDIUM PRESSURE SYSTEM - MIST STREAM

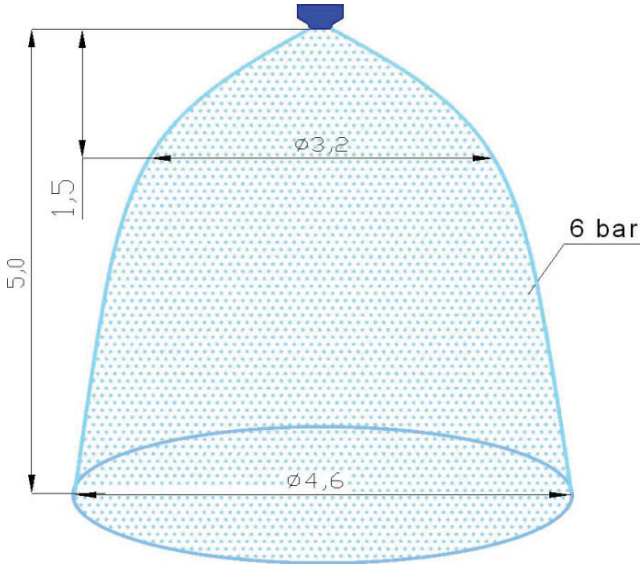

mMist MEDIUM PRESSURE SYSTEM - MIST STREAM PARAMETERS

Working pressure [bar]	:	4	6	10	15
Droplet size Dv [µm]	:	60 - 125			
Average K flow factor	:	29,9			
Extinguishing agent flow rate* [dm³/min]	:	59,8	73,2	94,5	115,8
Average flow rate per m2 ** [dm³/min]	:	3,2			
Effective range of horizontal stream [m]	:	3	3	3	3,5

***May vary ± 5%. | **At pressure P=6 bar**
USAGE: The nozzle is dedicated for systems with regular nozzle spacing 4 x 4 m. Calculation value of flow rate at such spacing at 6 bar pressure is 4,5 dm³/m².
Our products are being constantly developed and improved, therefore we reserve the right to change technical specifications without prior notice.

TUNNEL NOZZLE T1
Data Sheet

CATALOGUE NO.: C3008

1 Nozzle inlet ¾”

2 Pairs of outlet holes

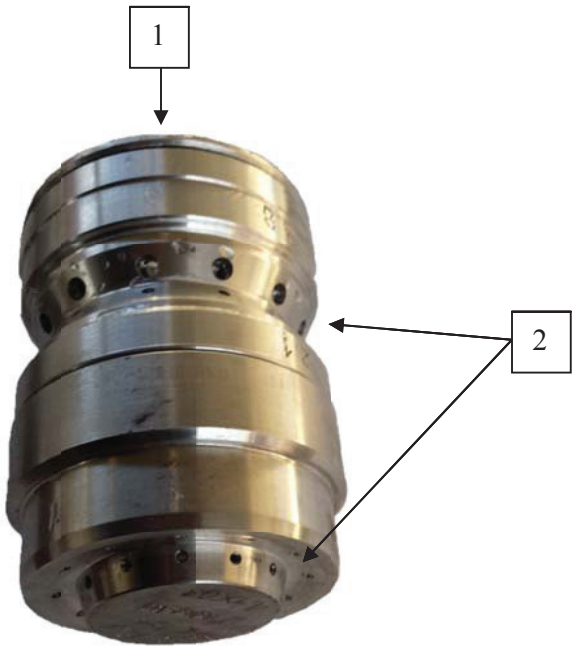

Application:

TOTAL FLOODING

The nozzle, specially designed for tunnel protection, provides large coverage with its rectangle-shaped stream, which fits well into limited tunnel space.

TECHNICAL PARAMETERS

Weight	:	1 kg
Water purity	:	< 400 µm
Connection type	:	¾” internal thread

STREAM PARAMETERS

Extinguishing medium	:	Water	
Supply	:	Water supply system or pump, continuous mode	
Pressure [bar]	:	4	6
Flow rate [L/min]	:	170	230
Stream diameter [m]	:	10 x 8	10 x 8
Average coverage [L/m2]	:	2,2	2,6
K flow factor	:	90	
Droplet size [µ]	:	100-400	

MIST STREAM

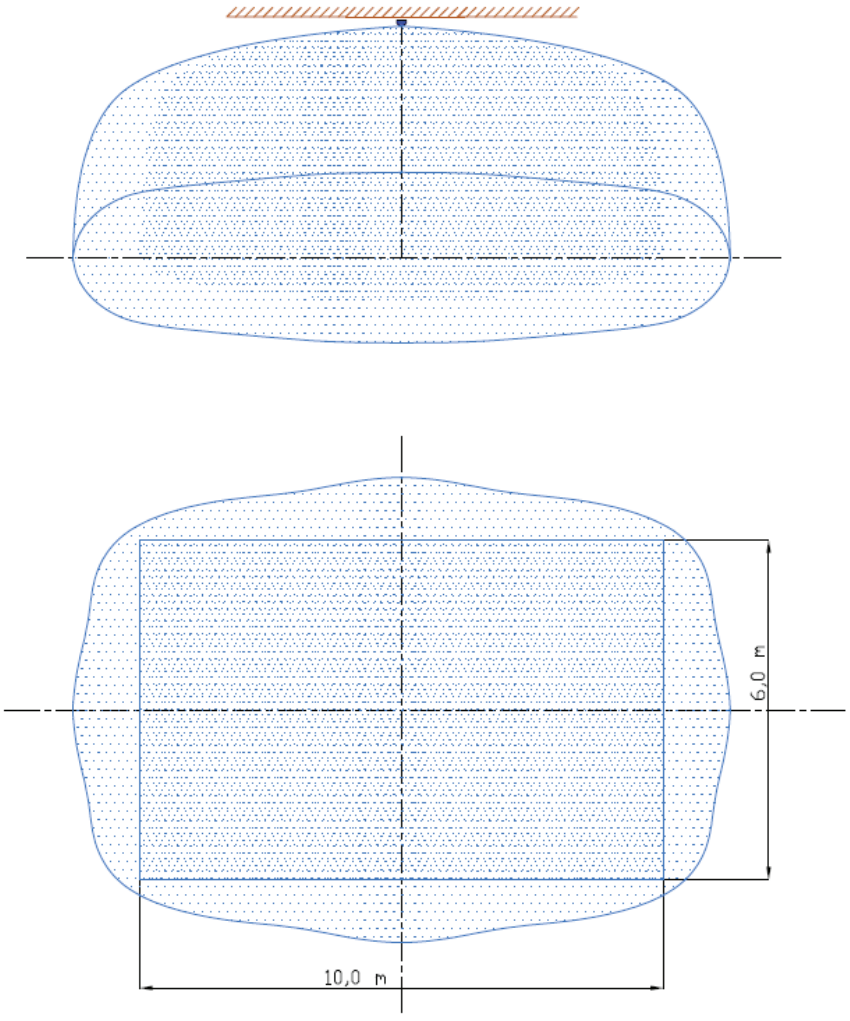

Our products are being constantly developed and improved, therefore we reserve the right to change technical specifications without prior notice.

CF-DGWP9 NOZZLE
Data Sheet

Full description: CFDGWP 9.X.Y

CFDGWP - (D) detection, (G) head, (WP) multi pairs
9 - Model number
X - Kind of material
1 stainless steel (316)
2 stainless steel (304)
3 brass (C37800)
4 brass (CuZn36Pb2As)

Y - 0 without cap
1 silicon protection cap

CFNGWPA 9.1.1

CFNGWPA 9.2.0

System Type:

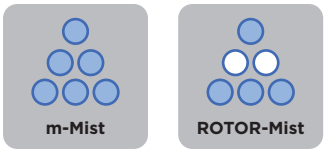

Application:

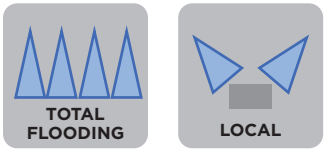

TECHNICAL PARAMETERS

Total flow surface	:	17,0 mm²
Basic extinguishing media	:	Water, gas and water
Net filter opening	:	0,4 x 0,4 mm
Connection size	:	1/2” BSP ext.
Inlet pressure	:	6 - 16 bar
Number of holes ring	:	1
Head weight	:	0,5 kg
Protection cap	:	Cat. No. - N 118
Heat-sensitive bulb	:	Orange - 57°C/RTI – 22ms

Design instructions are included in design manual. Our products are being constantly developed and improved, therefore we reserve the right to change technical specifications without prior notice.

TECHNICAL DETAILS

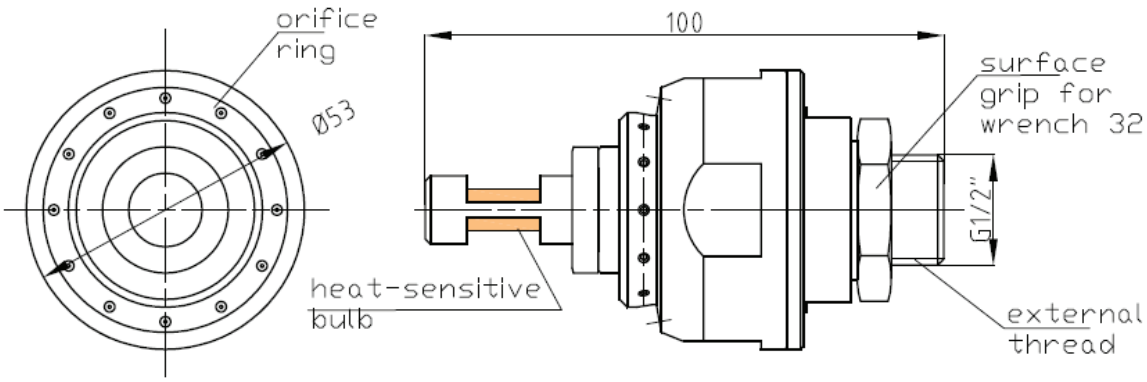

MEDIUM PRESSURE SYSTEM - MIST STREAM

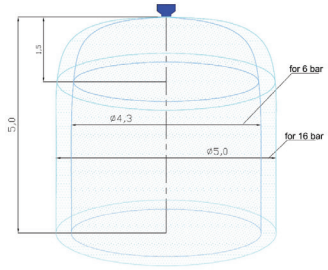

MEDIUM PRESSURE SYSTEM - MIST STREAM PARAMETERS						
Working pressure [bar]	:	6	8		12	16
Droplet size Dv [µm]	:		50 – 130			
K flow factor	:		8,6			
Extinguishing agent expenditure [lit/min]	:	21,1	24,3		29,7	34,4
Effective stream range * [m]	:	0,3	0,55	0,75	0,9	

ROTOR MIST SYSTEM - MIST STREAM

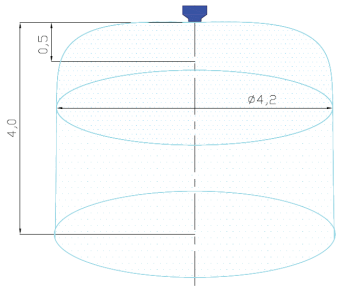

ROTOR MIST SYSTEM - MIST STREAM PARAMETERS	
Initial pressure of work [bar]	: 15
Droplet size Dv [µm]	: 50-100
Extinguishing agent expenditure** [lit/30 s]	: 14,0
The minimum distance required to develop a stream of Watermist [m]	: 0,3
Effective stream range *** [m]	: 0,5

***Range of horizontal stream. | **The value of information only. | ***Measurement in 30 seconds of action.**
Our products are being constantly developed and improved, therefore we reserve the right to change technical specifications without prior notice.

CF-DGWP15 NOZZLE
Data Sheet

Full description: CFDGWP 15.X.Y

CFDGWP - (D) detection, (G) head, (WP) multi pairs
15 - Model number
X - Kind of material
1 stainless steel (316)
2 stainless steel (304)
3 brass (C37800)
4 brass (CuZn36Pb2As)

Y - 0 without cap
1 silicon protection cap

CFDGWPA 15.1.1

CFDGWPA 15.2.0

System Type:

Application:

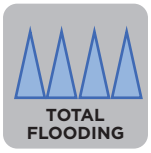

TECHNICAL PARAMETERS

Total flow surface	:	12,8
Basic extinguishing media	:	Water
Net filter opening	:	0,4 x 0,4 mm
Droplet size Dv	:	65 – 140 µm
Connection size	:	½" BSP ext
Inlet pressure	:	6 - 16 bar
Number of holes ring	:	1
Head weight	:	0,5 kg
Protection cap	:	Cat. No. - N 118
Heat-sensitive bulb	:	Orange - 57°C/RTI – 22ms

Design instructions are included in design manual. Our products are being constantly developed and improved, therefore we reserve the right to change technical specifications without prior notice.

TECHNICAL DETAILS

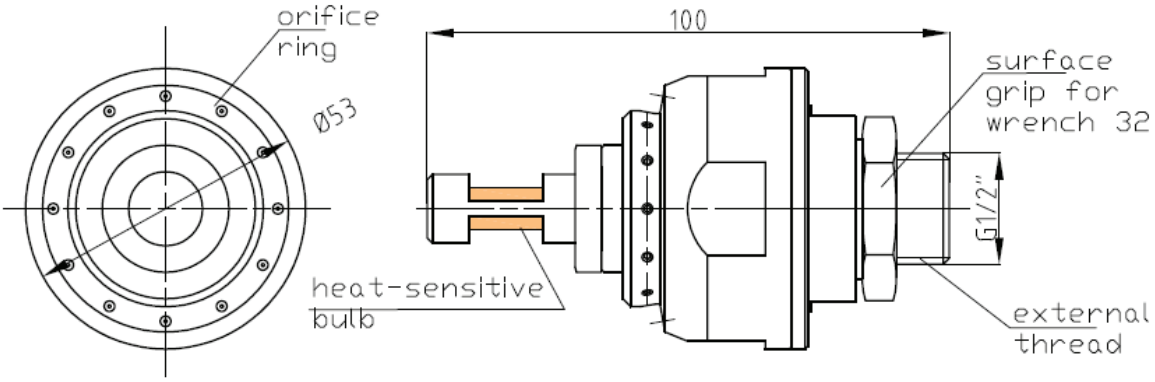

MEDIUM PRESSURE SYSTEM - MIST STREAM

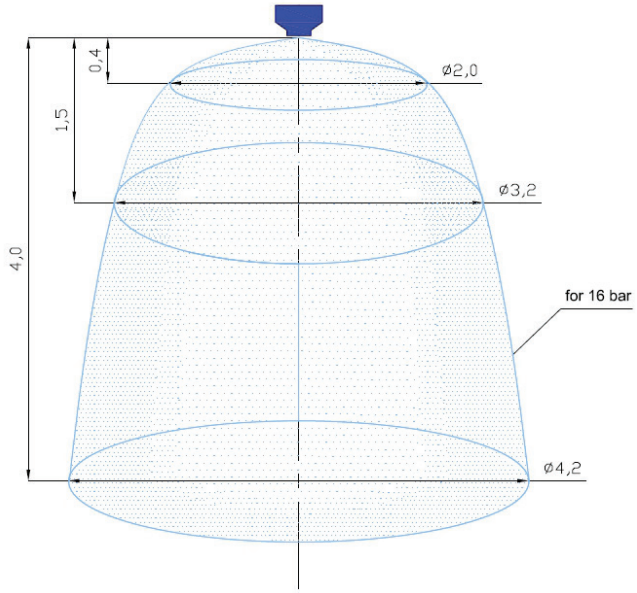

MEDIUM PRESSURE SYSTEM - MIST STREAM PARAMETERS

Working pressure [bar]	:	6	8	12	16
K flow factor	:		6,55		
Extinguishing agent expenditure [lit/min]	:	16,1	18,6	22,8	26,4
Effective stream range * [m]	:	0,3	0,5	0,75	0,85

***Range of horizontal stream**

Our products are being constantly developed and improved, therefore we reserve the right to change technical specifications without prior notice.

CF-DGWP16 NOZZLE
Data Sheet

Full description: CFDGWP 16.X.Y

CFDGWP - (D) detection, (G) head, (WP) multi pairs
16 - Model number
X - Kind of material
1 stainless steel (316)
2 stainless steel (304)
3 brass (C37800)
4 brass (CuZn36Pb2As)

Y - 0 without cap
1 silicon protection cap

CFNGWPA 16.1.1

CFNGWPA 16.2.0

System Type:

m-Mist

Application:

TOTAL FLOODING

LOCAL

TECHNICAL PARAMETERS

Total flow surface	:	11,8 mm²
Basic extinguishing media	:	Water
Net filter opening	:	0,4 x 0,4 mm
Droplet size Dv	:	55 – 135 µm
Connection size	:	½" BSP ext
Inlet pressure	:	6 - 16 bar
Number of holes ring	:	1
Head weight	:	0,5 kg
Protection cap	:	Cat. No. - N 118
Heat-sensitive bulb	:	Orange - 57°C/RTI – 22ms

Design instructions are included in design manual. Our products are being constantly developed and improved, therefore we reserve the right to change technical specifications without prior notice.

TECHNICAL DETAILS

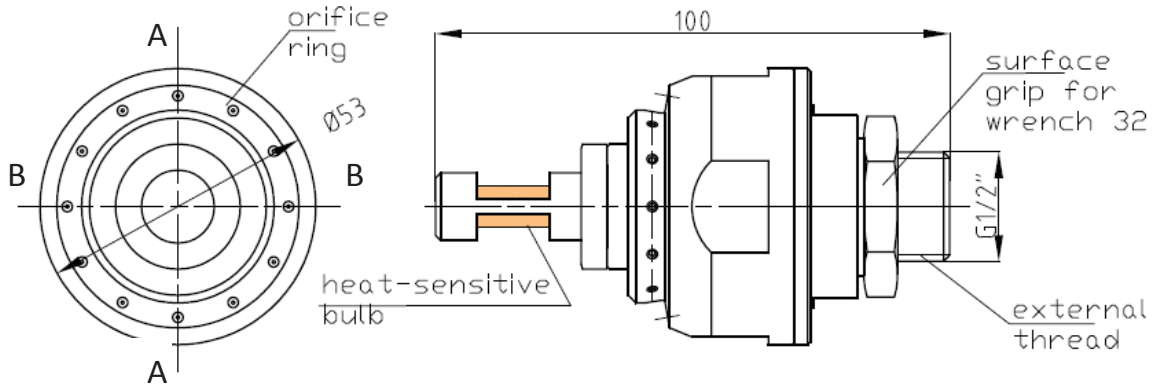

MEDIUM PRESSURE SYSTEM - MIST STREAM

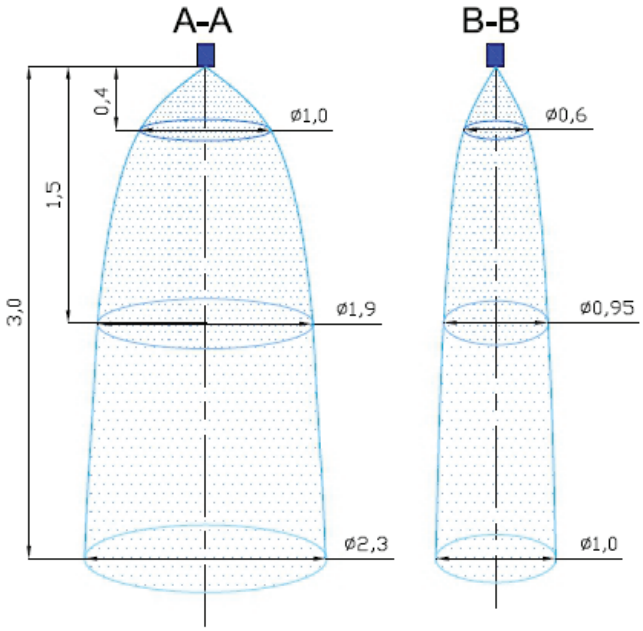

MEDIUM PRESSURE SYSTEM - MIST STREAM PARAMETERS

Working pressure [bar]	:	6	8	12	16
K flow factor	:		5,8		
Extinguishing agent expenditure [lit/min]	:	14,2	16,4	20,1	23,2
Effective stream range * [m]	A B	1,1 0,8	- -	- -	1,4 1,7

***Stream has an elliptical shape.**
Our products are being constantly developed and improved, therefore we reserve the right to change technical specifications without prior notice.

CF-DGWP17 NOZZLE
Data Sheet

Full description: CFDGWP 17.X.Y

CFDGWP - (D) detection, (G) head, (WP) multi pairs
17 - Model number
X - Kind of material
1 stainless steel (316)
2 stainless steel (304)
3 brass (C37800)
4 brass (CuZn36Pb2As)

Y - 0 without cap
1 silicon protection cap

CFNGWPA 17.1.1

CFNGWPA 17.2.0

System Type:

Application:

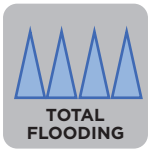

TECHNICAL PARAMETERS

Total flow surface	:	11,8 mm²
Basic extinguishing media	:	Water
Net filter opening	:	0,4 x 0,4 mm
Droplet size Dv	:	55 – 135 µm
Connection size	:	½" BSP ext
Inlet pressure	:	6 - 16 bar
Number of holes ring	:	1
Head weight	:	0,5 kg
Protection cap	:	Cat. No. - N 118
Heat-sensitive bulb	:	Orange - 57°C/RTI – 22ms

Design instructions are included in design manual. Our products are being constantly developed and improved, therefore we reserve the right to change technical specifications without prior notice.

TECHNICAL DETAILS

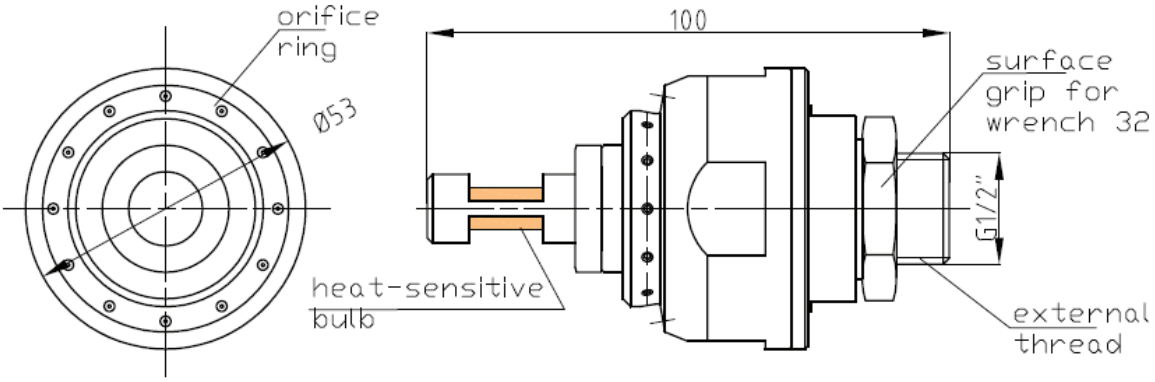

MEDIUM PRESSURE SYSTEM - MIST STREAM

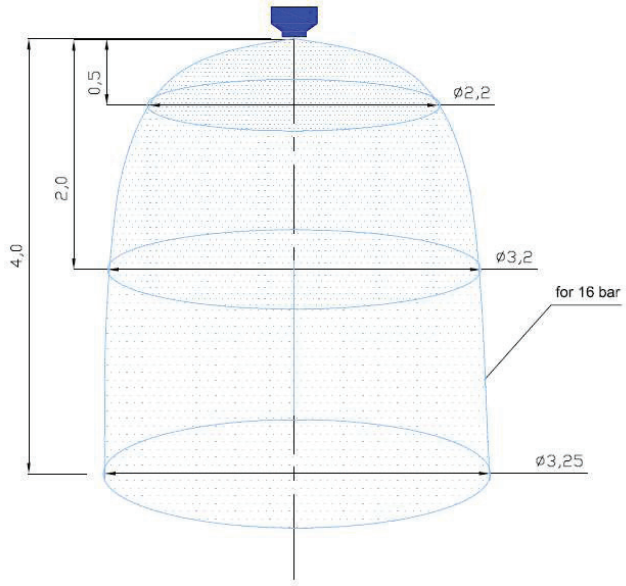

MEDIUM PRESSURE SYSTEM - MIST STREAM PARAMETERS

Working pressure [bar]	:	6	8	12	16
K flow factor	:		4,4		
Extinguishing agent expenditure [lit/min]	:	10,8	12,5	15,2	17,6
Effective stream range * [m]	:	1,2	-	-	1,4

***Range of horizontal stream.**
Our products are being constantly developed and improved, therefore we reserve the right to change technical specifications without prior notice.

CF-DGWP44 NOZZLE
Data Sheet

Full description: CFDGWP 44.X.Y

CFDGWP - (D) detection, (G) head, (WP) multi pairs
44 - Model number
X - Kind of material
1 stainless steel (316)
2 stainless steel (304)
3 brass (C37800)
4 brass (CuZn36Pb2As)

Y - 0 without cap
1 silicon protection cap

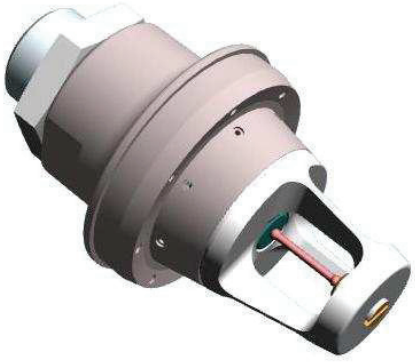

CFDGWP 44.1.0

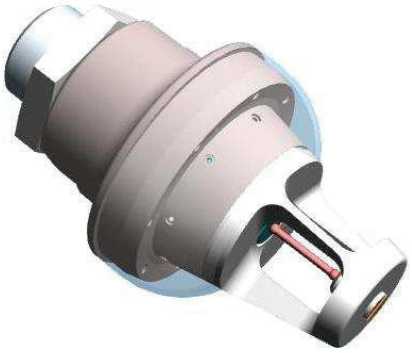

CFDGWP 44.2.1

System Type:

Application:

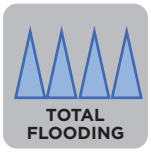

TECHNICAL PARAMETERS

Total flow surface	:	9,86 mm²
Basic extinguishing media	:	Water
Filter mesh	:	0,4 x 0,4 mm
Connection size	:	1/2” BSP male
Inlet pressure	:	6 -15 bar
Nozzle weight	:	0,35 kg
Protection cap	:	cat. no. - N 119
Heat-sensitive bulb	:	Orange - 57°C/RTI – 22ms

Design instructions are included in design manual. Our products are being constantly developed and improved, therefore we reserve the right to change technical specifications without prior notice.

TECHNICAL DETAILS

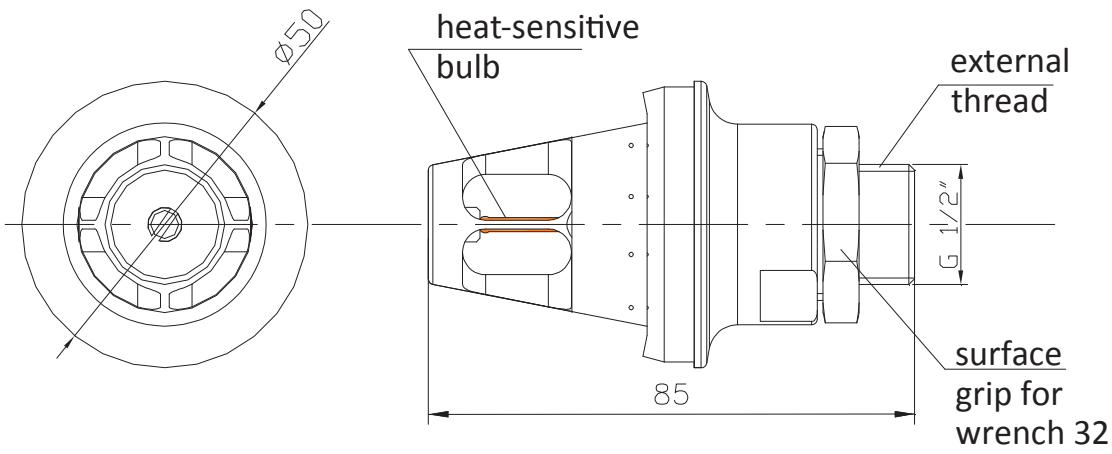

mMist MEDIUM PRESSURE SYSTEM - MIST STREAM

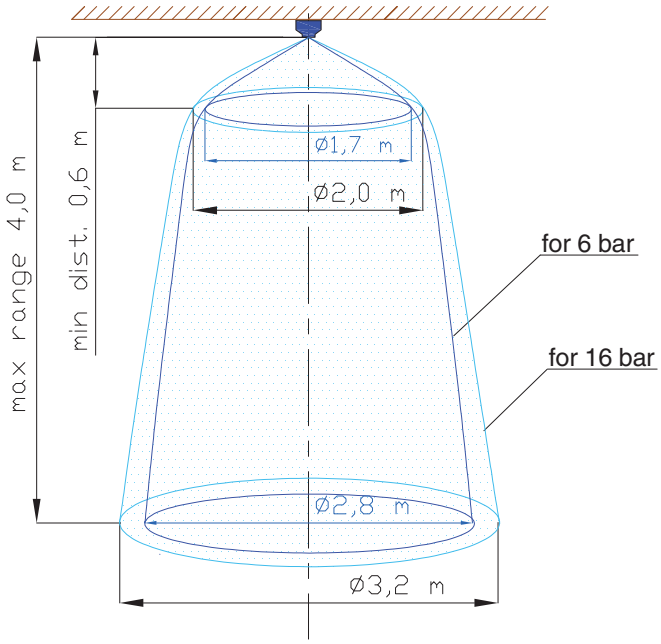

mMist MEDIUM PRESSURE SYSTEM - MIST STREAM PARAMETERS

Working pressure [bar]	:	6	8	12	15
Droplet size Dv [µm]	:	95	85	70	65
Average K flow factor	:		5,68		
Extinguishing agent flow rate* [dm³/min]	:	13,9	16,0	19,7	22,0

***May vary ± 5%.**
Our products are being constantly developed and improved, therefore we reserve the right to change technical specifications without prior notice.

CF-DGWP46 NOZZLE
Data Sheet

Full description: CFDGWP 46.S.Y

CFDGWP - (D) detection, (G) head, (WP) multi pairs
46 - Model number
S - stainless steel (316)

Y - 0 without cap
1 silicon protection cap

CFDGWP 46.S.0

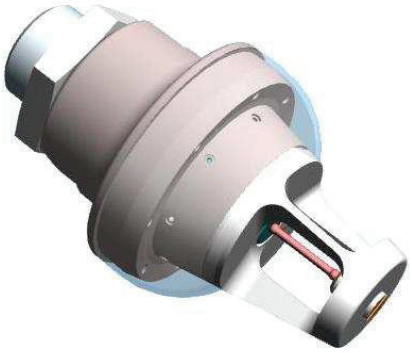

CFDGWP 46.S.1

System Type:

Application:

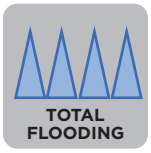

TECHNICAL PARAMETERS

Total flow surface	:	38,0 mm²
Basic extinguishing media	:	Water
Filter mesh	:	0,4 x 0,4 mm
Connection size	:	1/2” BSP male
Inlet pressure	:	4 -12 bar
Nozzle weight	:	0,35 kg
Protection cap	:	cat. no. - N 119
Heat-sensitive bulb	:	Orange – F2 x 16

TECHNICAL DETAILS

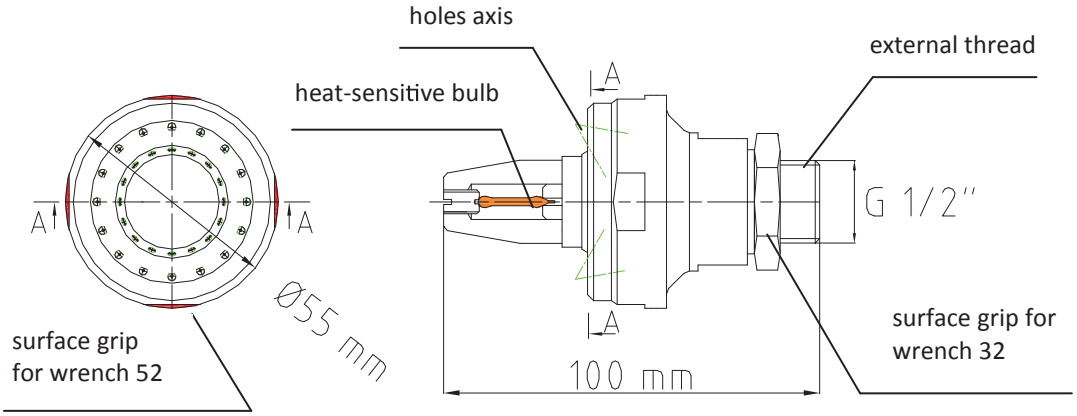

mMist MEDIUM PRESSURE SYSTEM - MIST STREAM

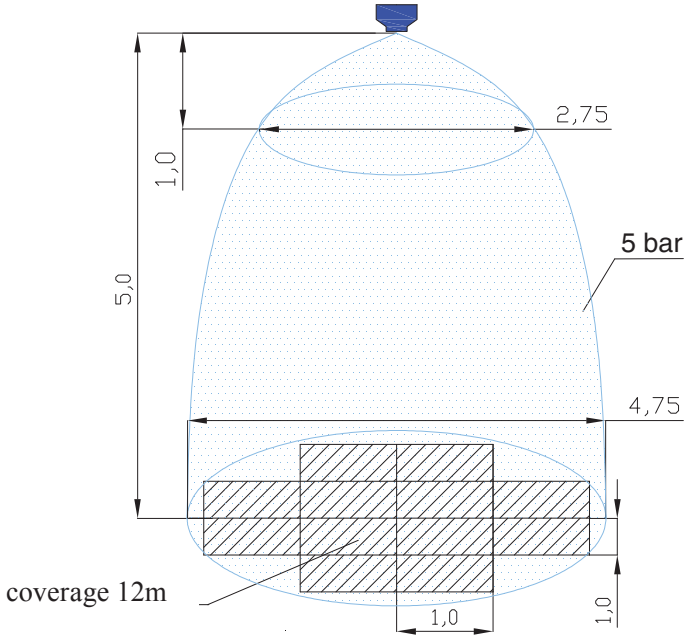

mMist MEDIUM PRESSURE SYSTEM - MIST STREAM PARAMETERS

Working pressure [bar]	:	4	5	6
Droplet size Dv [µm]	:	120	110	105
Average K flow factor	:		15,5	
Extinguishing agent flow rate* [dm³/min]	:	35,0	39,0	43,0
Average flow rate per m2 [l/min]	:	2,11	2,27	2,47

*** May vary ± 5%.**
Our products are being constantly developed and improved, therefore we reserve the right to change technical specifications without prior notice.

CF-DGWP49 NOZZLE
Data Sheet

Full description: CFDGWP 46.S.Y

CFDGWP - (D) detection, (G) head, (WP) multi pairs
49 - Model number
S - Stainless steel (316)

Y - 0 without cap
1 silicon protection cap

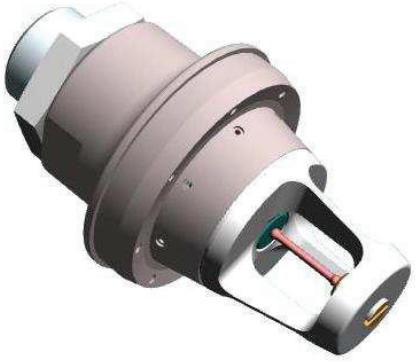

CFDGWP 49.S.0

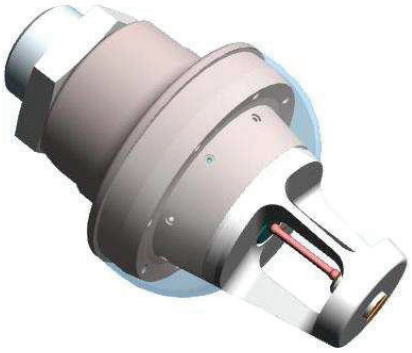

CFDGWP 49.S.1

System Type:

Application:

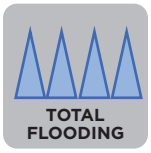

TECHNICAL PARAMETERS

Total flow surface	:	60,5 mm²
Basic extinguishing media	:	Water
Filter mesh	:	0,4 x 0,4 mm
Connection size	:	1/2” BSP male
Inlet pressure	:	4 - 6 bar
Nozzle weight	:	0,35 kg
Protection cap	:	cat. no. - N 119
Heat-sensitive bulb	:	Orange – F2 x 16

TECHNICAL DETAILS

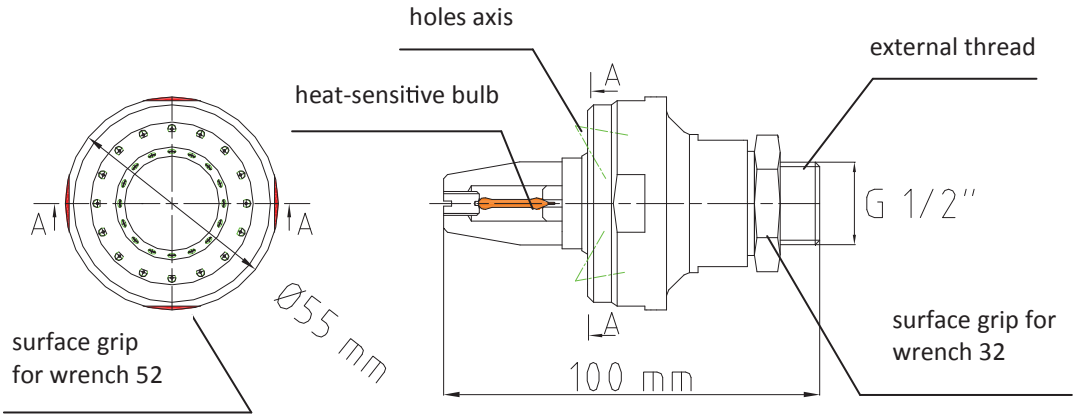

mMist MEDIUM PRESSURE SYSTEM - MIST STREAM

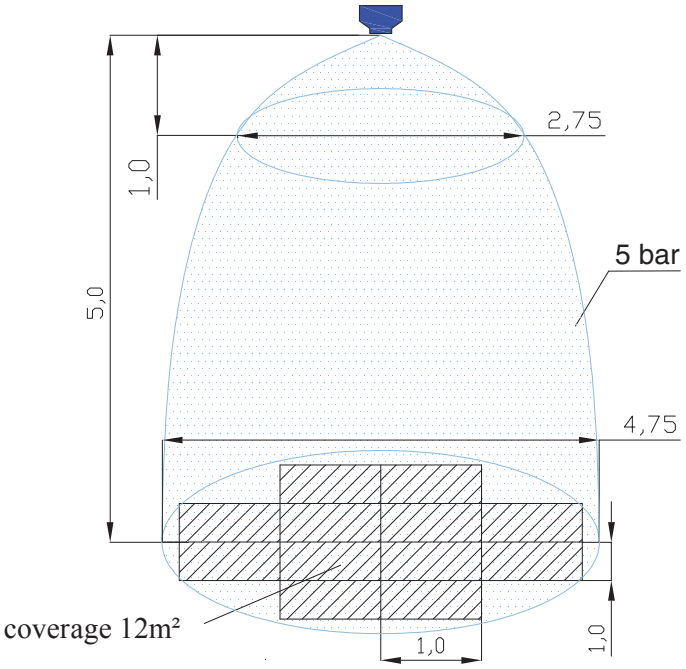

mMist MEDIUM PRESSURE SYSTEM - MIST STREAM PARAMETERS

Working pressure [bar]	:	4	5	6
Droplet size Dv [µm]	:	125	115	110
Average K flow factor	:		28,8	
Extinguishing agent flow rate* [dm³/min]	:	57,6	64,4	70,5
Average flow rate per m2 [l/min]	:	-	4,03	-

*** May vary ± 5%.**
Our products are being constantly developed and improved, therefore we reserve the right to change technical specifications without prior notice.

CF-DGWP 62 NOZZLE
Data Sheet

Full description: CF-DGWP 62.X

CF-DGWP - (N) net filter, (G) head, (WP) multi pairs
62 - Model number

X - 0 without cap
1 silicon protection cap

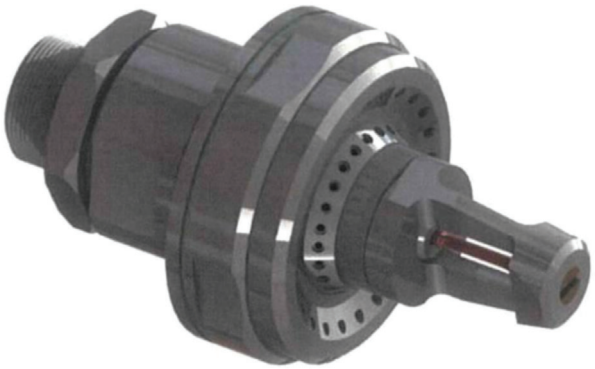

DGWP 62.0

System Type:

Application:

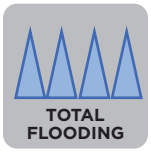

TECHNICAL PARAMETERS

Material	:	Stainless steel (316)
Total flow surface	:	55,0 mm²
Basic extinguishing media	:	Water
Filter mesh	:	0,4 x 0,4 mm
Connection type	:	3/4” BSP male
Inlet pressure	:	4 - 12 bar
Nozzle weight	:	0,65 kg
Protection cap	:	Cat. no. – NA 006

TECHNICAL DETAILS

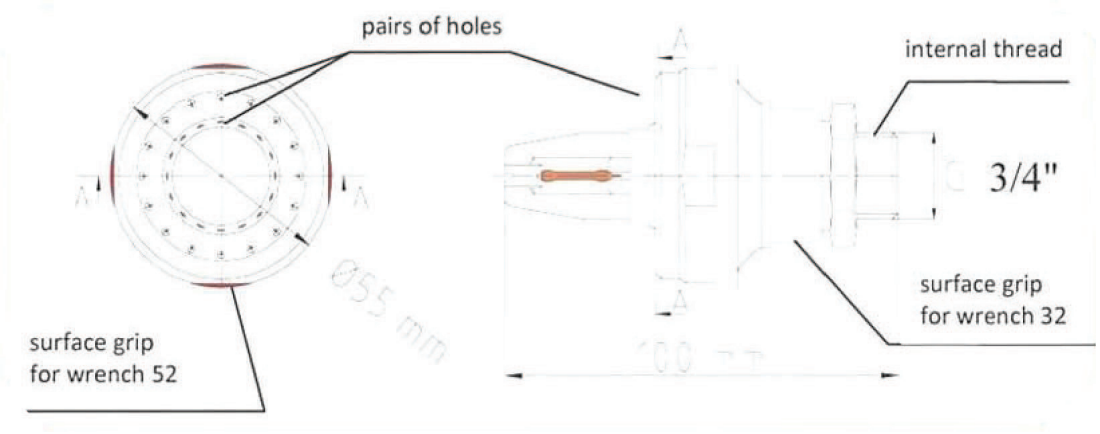

mMist MEDIUM PRESSURE SYSTEM - MIST STREAM

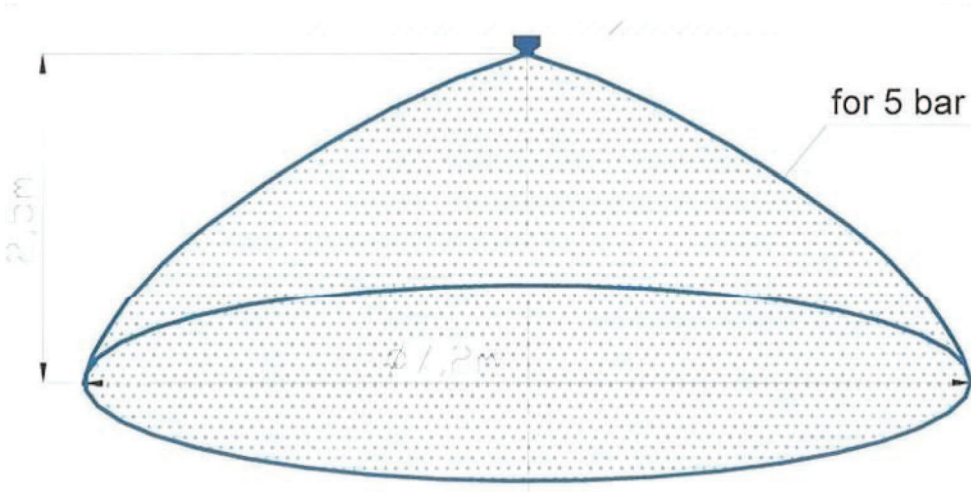

mMist MEDIUM PRESSURE SYSTEM - MIST STREAM PARAMETERS

Working pressure [bar]	:	4	6	8	12
Droplet size Dv* [µm]	:	45 - axis, 135 - stream edge			
Average K flow factor	:	25,6			
Extinguishing agent flow rate* [dm³/min]	:	51,5	62,5	72,5	88,5
Coverage of 1 m2 of protected area* [dm³/min]	:	1,2			

***At pressure P=5bar | ** May vary ± 5%.**
USAGE: The nozzle is dedicated for systems with regular nozzle spacing 4 x 4 m. Calculation value of flow rate at such spacing at 6 bar pressure is 4,5 dm³/m².
Our products are being constantly developed and improved, therefore we reserve the right to change technical specifications without prior notice.

WATERMIST HEAD MODEI
111 FEN-T ZRT-30.00.00

PRODUCT DESCRIPTION

CATALOG NUMBER 7/G

DESIGNATION: 111 FEN-T

1 - Number of water jets
1 - Number of air jets
1 - Air flow [m^3/min]
FEN - Flame Effective Neutralization
T - Temperature: Elevated temperature resistant air water

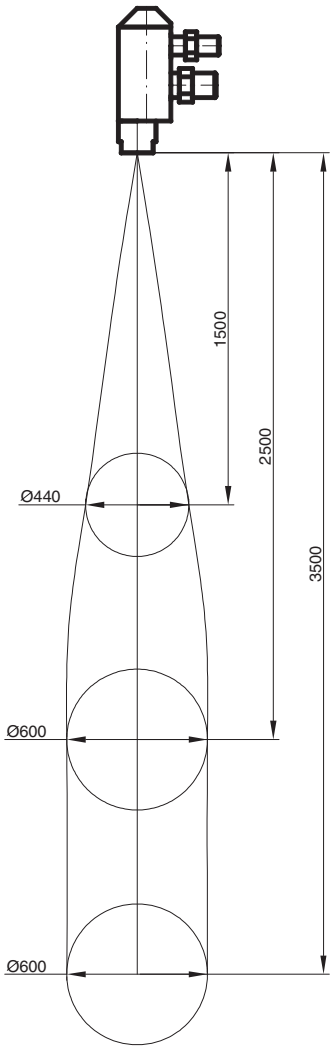

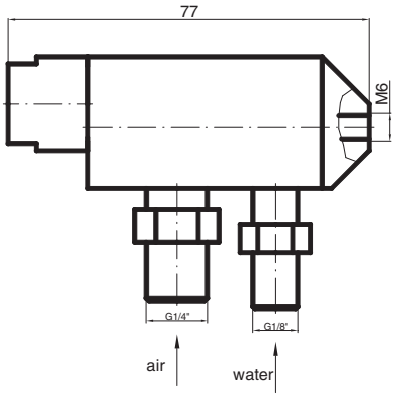

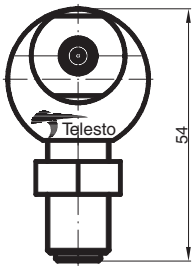

TECHNICAL PARAMETERS

	Air	Water
Req. supply pressure	4±0.5 [bar]	4±0.5 [bar]
Req. suppl. flow rate	1±0.2 [m^3/min]	2±0.2 [l/min]
Req. suppl. flow qual.	Solids diameter under 40 [µm] Allowable conctr. < 10 [mg/m^3]	filter 300 [µm]

Watermist head weight	:	0.4 [kg]
Range of effective mist stream	:	2.5 [m]
Maximum range of mist stream	:	3.5 [m]
Working temperature	:	10 to 700 °C
Application	:	Fire suppression
Droplet diameter	:	4 to 200 µm
Average volume droplet diameter	:	20 to 30 µm
Connections are threaded nipple	:	- Air : Threaded nipple 1/4'' - Water : Threaded nipple 1/8''
Mounting	:	M6 threaded aperture on back side of the head body

WATERMIST HEAD MODEL
234 FEN- T GT-13.01.00/3

PRODUCT DESCRIPTION

CATALOG NUMBER 12/G

DESIGNATION: 234 FEN-T

2 - Number of water jets
2 - Number of air jets
4 - Air flow [m^3/min]
FEN - Flame Effective Neutralization
T - Temperature: Elevated temperature resistant

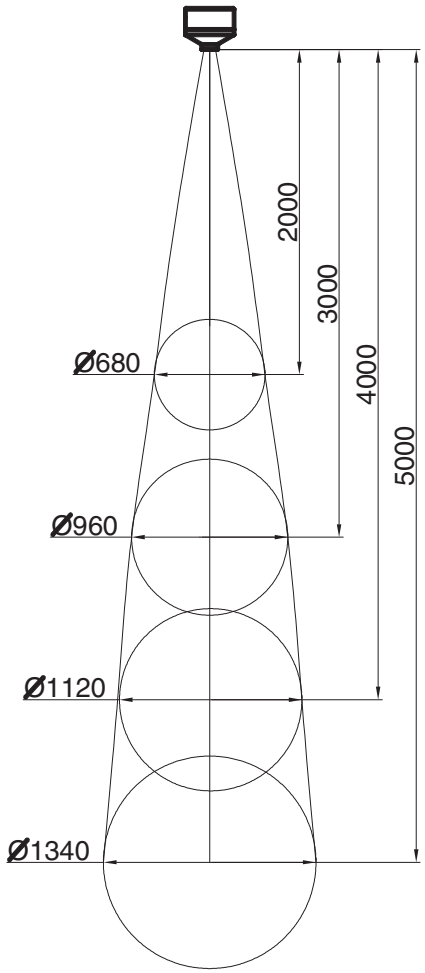

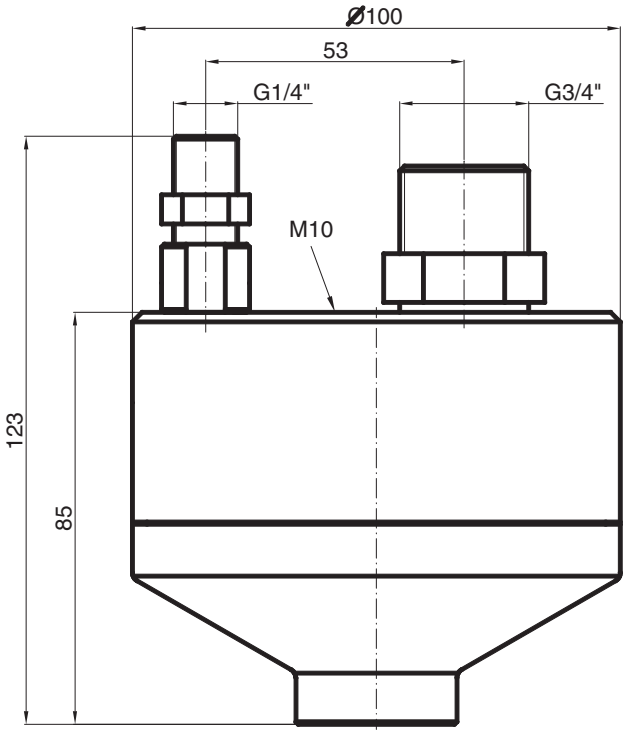

TECHNICAL PARAMETERS

	Air	Water
Req. supply pressure	4±0.5 [bar]	4±0.5 [bar]
Req. suppl. flow rate	4±0.3 [m^3/min]	12±1 [l/min]
Req. suppl. flow qual.	Solids diameter under 40 [µm] Allowable conctr. < 10 [mg/m^3]	filter 300 [µm]

Watermist head weight	:	3.4 [kg]
Seals	:	Flat copper gasket
Air	:	Flat copper gasket outer diam. 23/ inner diam.17/ thickness 2 [mm]
Water	:	Flat copper gasket diam.11,5/diam.8/ thickness 2 [mm]
Range of effective mist stream	:	5 [m]
Maximum range of mist stream	:	6 [m]
Installation	:	Arbitrary
Operating temperature	:	10 to 100 °C Heatproof to 800 °C
Application	:	Fire suppression
Droplet diameter	:	4 to 300 µm
Average volume droplet diameter	:	40 µm
Mounting	:	M10 threaded aperture on back side of the head body.

WATERMIST HEAD MODEL 110,5 FEN-T ZRT-33.00.00

PRODUCT DESCRIPTION

CATALOG NUMBER 6/G

DESIGNATION: 110,5 FEN-T

1 - Number of water jets
1 - Number of air jets
0,5 - Air flow [m^3/min]
FEN - Flame Effective Neutralization
T - Temperature: High heat resistant

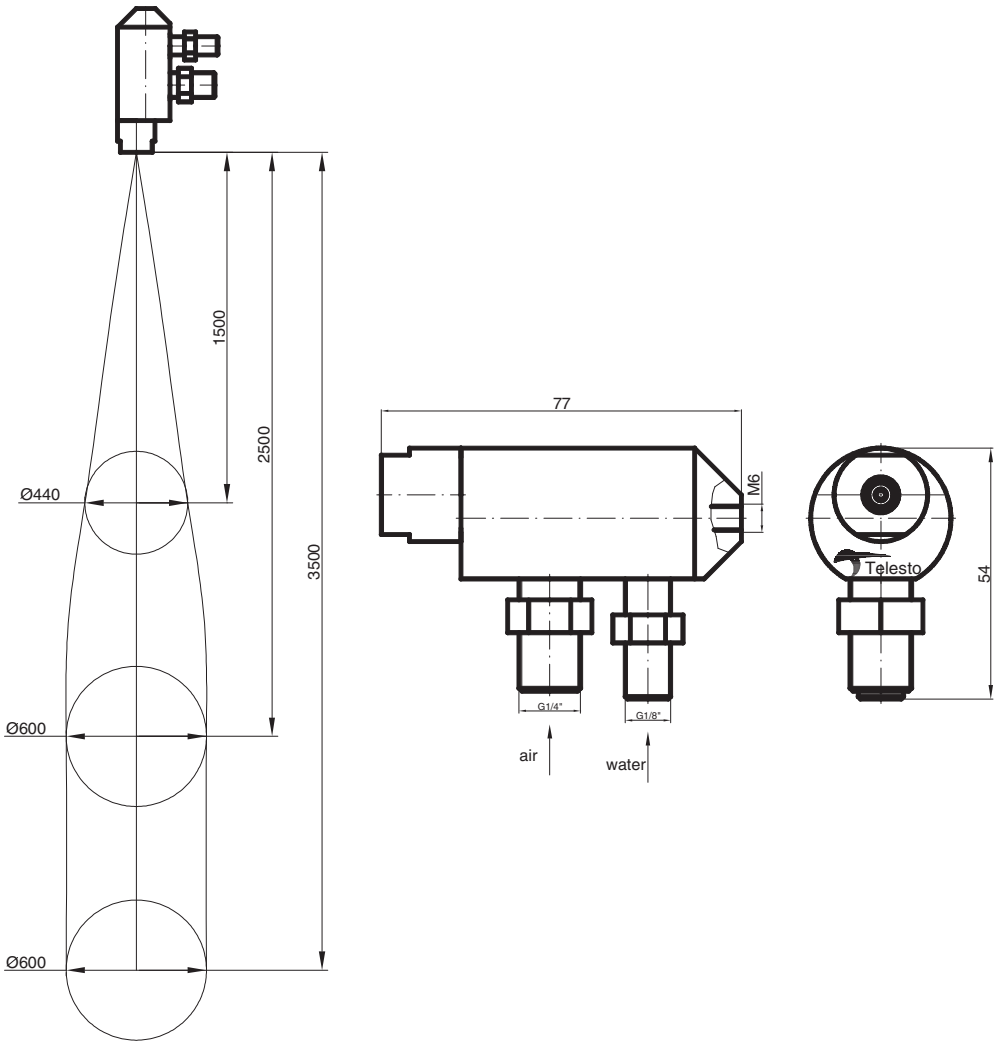

TECHNICAL PARAMETERS

	Air	Water
Req. supply pressure	4±0.5 [bar]	4±0.5 [bar]
Req. suppl. flow rate	0,5±0,1 [m^3/min]	1±0,1 [l/min]
Req. suppl. flow qual.	Solids diameter under 40 [µm] Allowable conctr. < 10 [mg/m^3]	filter 300 [µm]

Watermist head weight	:	0.4 [kg]
Range of effective mist stream	:	2.5 [m]
Maximum range of mist stream	:	3.5 [m]
Working temperature	:	10 °C to 700 °C
Application	:	Fire suppression
Droplet diameter	:	4 µm to 200 µm
Average volume droplet diameter	:	20 µm to 30 µm
Connections are threaded nipple	:	- Air : Threaded nipple 1/4'' - Water : Threaded nipple 1/8''
Mounting	:	M6 threaded hole on back side of the head .

WATERMIST HEAD MODEL
122 FEN-T GT-55.00.00

PRODUCT DESCRIPTION

CATALOG NUMBER 1/G

DESIGNATION: 122 FEN-T

1 - Number of water jets
2 - Number of air jets
2 - Air flow [m^3/min]
FEN - Flame Effective Neutralization
T - Temperature: High heat resistant

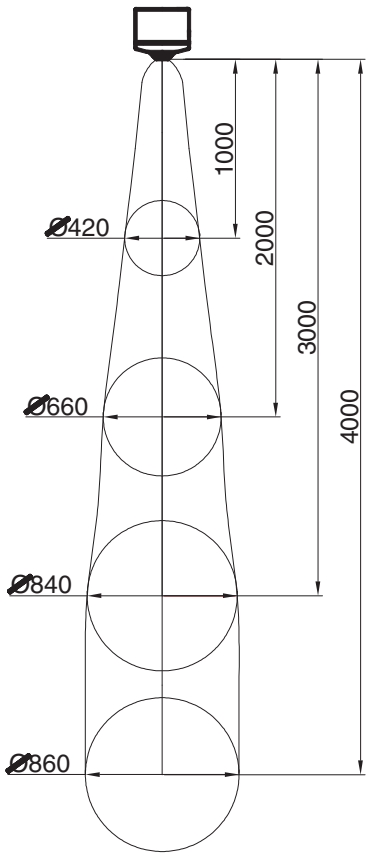

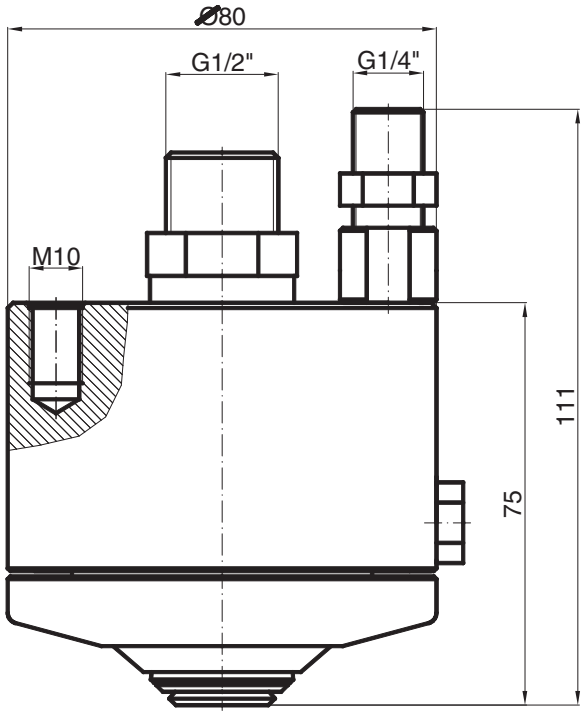

TECHNICAL PARAMETERS

	Air	Water
Req. supply pressure	4±0.5 [bar]	4±0.5 [bar]
Req. suppl. flow rate	2±0.2 [m^3/min]	4±0.2 [l/min
Req. suppl. flow qual.	Solids diameter under 40 [µm] Allowable conctr. < 10 [mg/m^3]	filter 300 [µm]

Watermist head weight	:	2.25 [kg]
Seals	:	Flat copper gaskets
Air	:	outer diam.18/ inner diam.14/ thickness 2 [mm]
Water	:	outer diam.11.5/ inner diam. 8/ thickness 2 [mm]
Range of effective mist stream	:	4 [m]
Maximum range of mist stream	:	4.5 [m]
Installation	:	Arbitrary
Operating temperature	:	10 to 100 °C Heatproof to 800 °C
Application	:	Fire suppression
Droplet diameter	:	4 to 200 µm
Average volume droplet diameter	:	20 to 30 µm
Mounting	:	M10 threaded aperture on back side of the head body.
Option	:	Water supply tap may be to the side of the head body.

WATERMIST HEAD MODEL 110,5 B FEN-T GT-60.00.00

PRODUCT DESCRIPTION

CATALOG NUMBER 11/G

DESIGNATION: 110,5 B FEN-T

1 - Number of water jets
1 - Number of air jets
0,5 - Air flow [m^3/min]
B - Radial feed of liquid
FEN - Flame Effective Neutralization
T - Temperature: High heat resistant

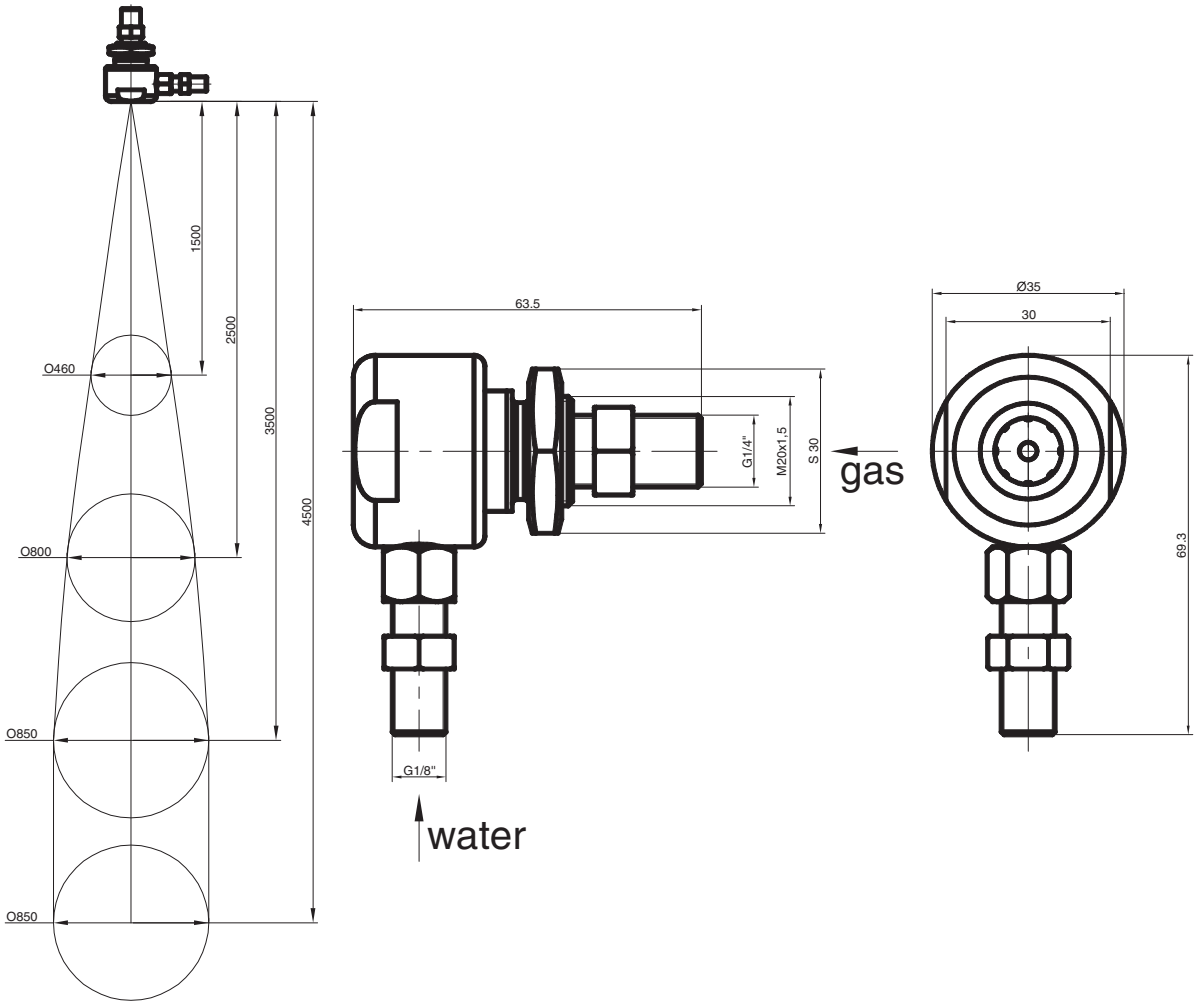

TECHNICAL PARAMETERS

	Air	Water
Req. supply pressure	4±0.5 [bar]	4±0.5 [bar]
Req. suppl. flow rate	0,5±0,1 [m^3/min]	1±0,1 [l/min]
Req. suppl. flow qual.	Solids diameter under 40 [µm] Allowable conctr. < 10 [mg/m^3]	filter 300 [µm]

Watermist head weight	:	0.25 [kg]
Range of effective mist stream	:	3.5 [m]
Maximum range of mist stream	:	4.5 [m]
Working temperature	:	10 °C to 700 °C
Application	:	Fire suppression, dust suppression, decontamination
Droplet diameter	:	4 µm to 200 µm
Average volume droplet diameter	:	20 µm to 30 µm
Connections are threaded nipple	:	- Air : Threaded nipple 1/4'' - Water : Threaded nipple 1/8''
Mounting	:	M6 threaded hole on back side of the head .

WATERMIST HEAD MODEL 233 FEN- T GT-12.01.00/3

PRODUCT DESCRIPTION

CATALOG NUMBER 8/G

DESIGNATION: 233 FEN-T

2 - Number of water jets
2 - Number of air jets
3 - Air flow [m^3/min]
FEN - Flame Effective Neutralization
T - Temperature: Elevated temperature resistant

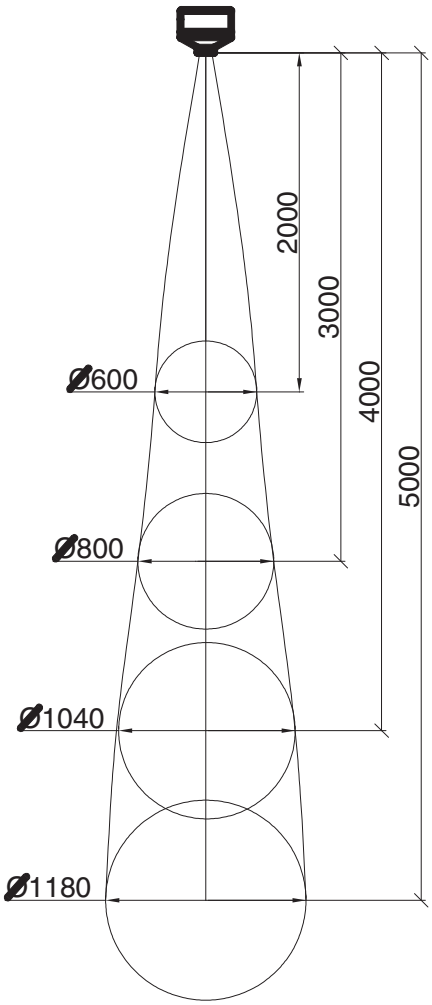

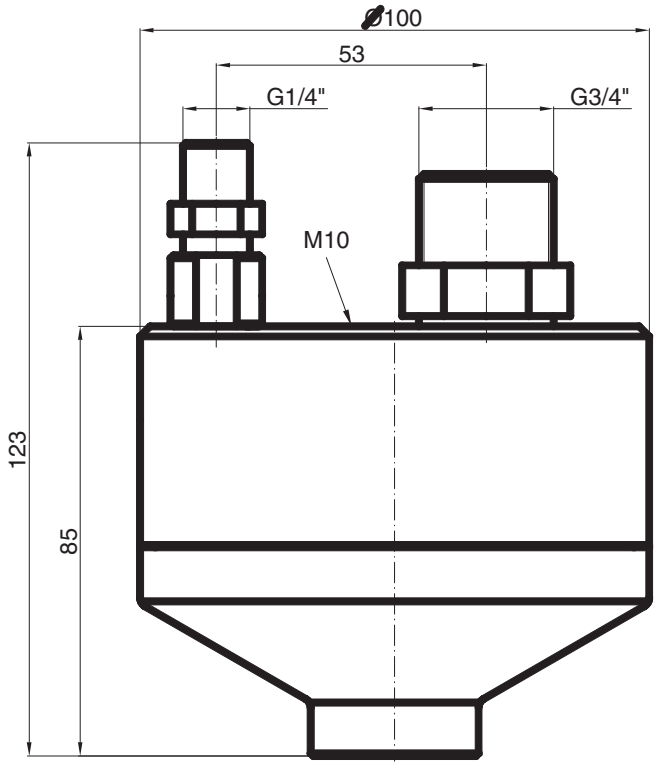

TECHNICAL PARAMETERS

	Air	Water
Req. supply pressure	4±0.5 [bar]	4±0.5 [bar]
Req. suppl. flow rate	3±0.3 [m^3/min]	9±1 [l/min]
Req. suppl. flow qual.	Solids diameter under 40 [µm] Allowable conctr. < 10 [mg/m^3]	filter 300 [µm]

Watermist head weight	:	3.4 [kg]
Seals	:	Flat copper gasket
Air	:	Flat copper gasket outer diam. 23/ inner diam.17/ thickness 2 [mm]
Water	:	Flat copper gasket diam.11,5/diam.8/ thickness 2 [mm]
Range of effective mist stream	:	5 [m]
Maximum range of mist stream	:	5.5 [m]
Installation	:	Arbitrary
Operating temperature	:	10 to 100 °C Heatproof to 800 °C
Application	:	Fire suppression
Droplet diameter	:	4 to 300 µm
Average volume droplet diameter	:	40 µm
Mounting	:	M10 threaded aperture on back side of the head body.

Ceasefire Industries UK Limited,
3, Waterhouse Square, 138-142 Holborn,
London, EC1N2SW, United Kingdom

Call our Hotline:
0-113-868-6666 / 0-126-891-9999

www.ceasefire.co.uk

Follow us on:

MARKETED BY: